Buderus

Installation instructions

Cascade flue gas header
Logano plus GB312 (Dual boiler)

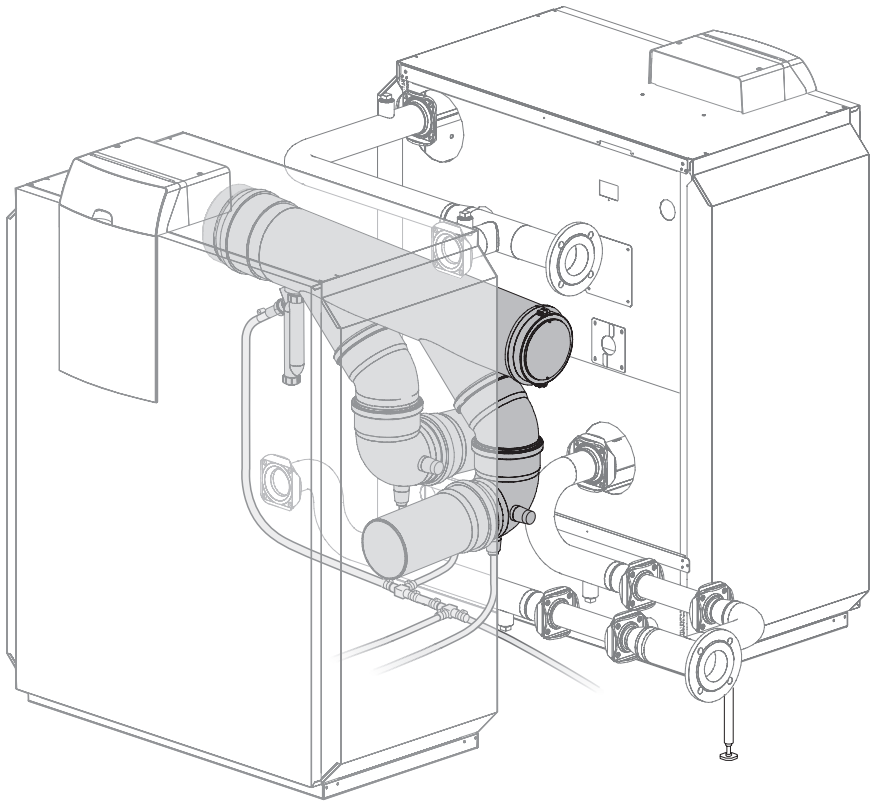

1 Positioning the boiler 3

2 Scope of supply 5

3 Installing the flue gas header 6

3.1 Installing the flue gas header for 180, 240 or 320 kW dual boiler 7

3.2 Installing the flue gas header for 400, 480 or 560 kW dual boilers 8

3.3 Routing condensate pipework 9

4 Testing the system 10

About this manual

This installation manual contains important information for the safe and appropriate installation of the cascade flue gas header.

These installation instructions are designed for heating contractors who, through their training and experience, are familiar with heating systems.

Only use original Buderus spare parts. Buderus cannot accept liability for any losses resulting from the use of parts not supplied by Buderus.

Correct use

The cascade flue gas header has been designed to connect two Logano GB312 condensing boilers. The cascade flue gas header is referred to as the "flue gas header" throughout these installation instructions.



USER NOTE

Observe all standards and guidelines applicable to the installation and operation of this heating system in your country.

1 Positioning the boiler

CAUTION!

SYSTEM DAMAGE

caused by frost.

Install the boiler in a room where it is safe from the risk of freezing.

USER NOTE

Because welding work is required, it is advisable to fit the cascade pipework for the water pipes before fitting the flue gas header.

The cascade flue gas header can be installed in the opposite direction (irrespective of the direction of the water pipework). Please observe the minimum clearances. Reducing the minimum clearances makes the boiler more difficult to access.

The base or foundation on which the boiler is to stand must be perfectly flat, level and strong enough to support the weight.

Level the boilers horizontally and vertically.

Boiler rating kW:		180*	240*	320*	400*	480*	560*
A (mm)	recommended	700					
	minimum	500					
B (mm)	recommended	700					
	minimum	500					
C (mm)	recommended	500					
	minimum	100					
D (mm)	recommended	700			900		
	minimum	550	550	500	700	650	600
E (mm)		see Fig. 2 and Fig. 3					

Tab. 1 Dimensions in mm

** Values of both dual boilers added together*

USER NOTE

Where appropriate, allow extra wall clearances for additional components.

Observe the boiler installation and maintenance instructions.

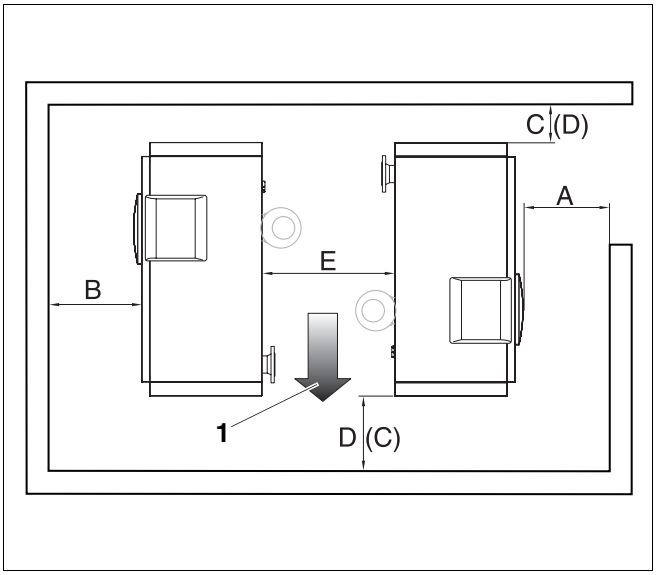

Fig. 1 Positioning the boiler

Item 1: *Example of pipework direction*

( ) The information in brackets applies when the pipework is installed in the opposite direction.

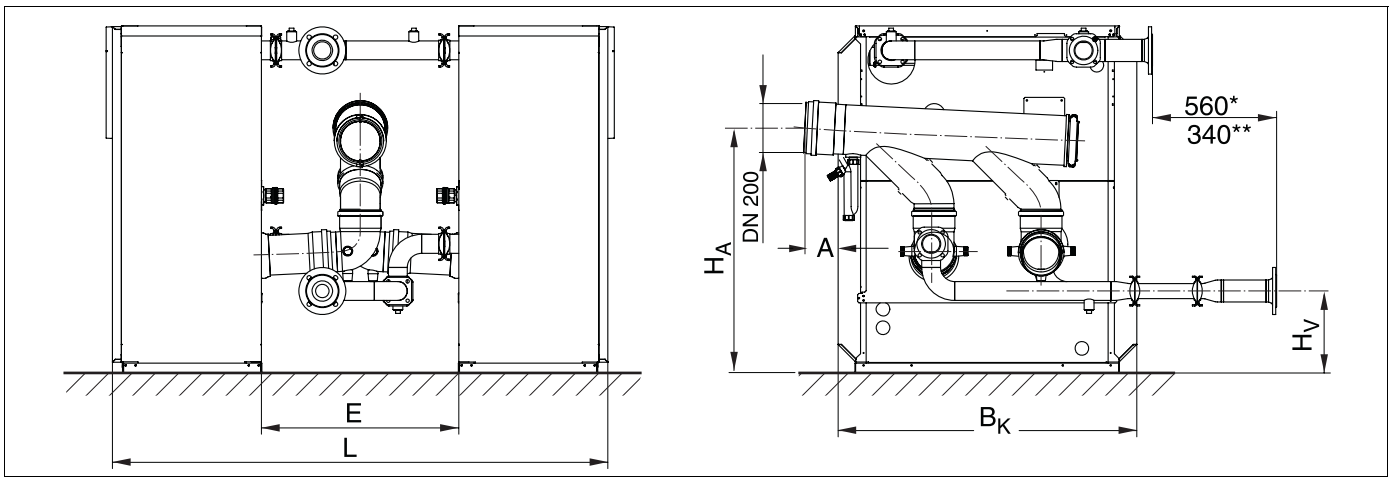

Fig. 2 GB312 (180 to 320 kW) cascade flue gas header dimensions

** when a pump is installed*

*** when a motor ring butterfly valve is installed*

Boiler rating	2 x 90 kW (2 x 4 sect.)	2 x 120 kW (2 x 4 sect.)	2 x 160 kW (2 x 5 sect.)
E	642	642	795
L	1842	1842	1995
B_K	994	994	1202
H_V	339	339	330
A	176	176	125
H_A	980	980	989

Tab. 2 GB312 cascade flue gas header dimensions (in mm)

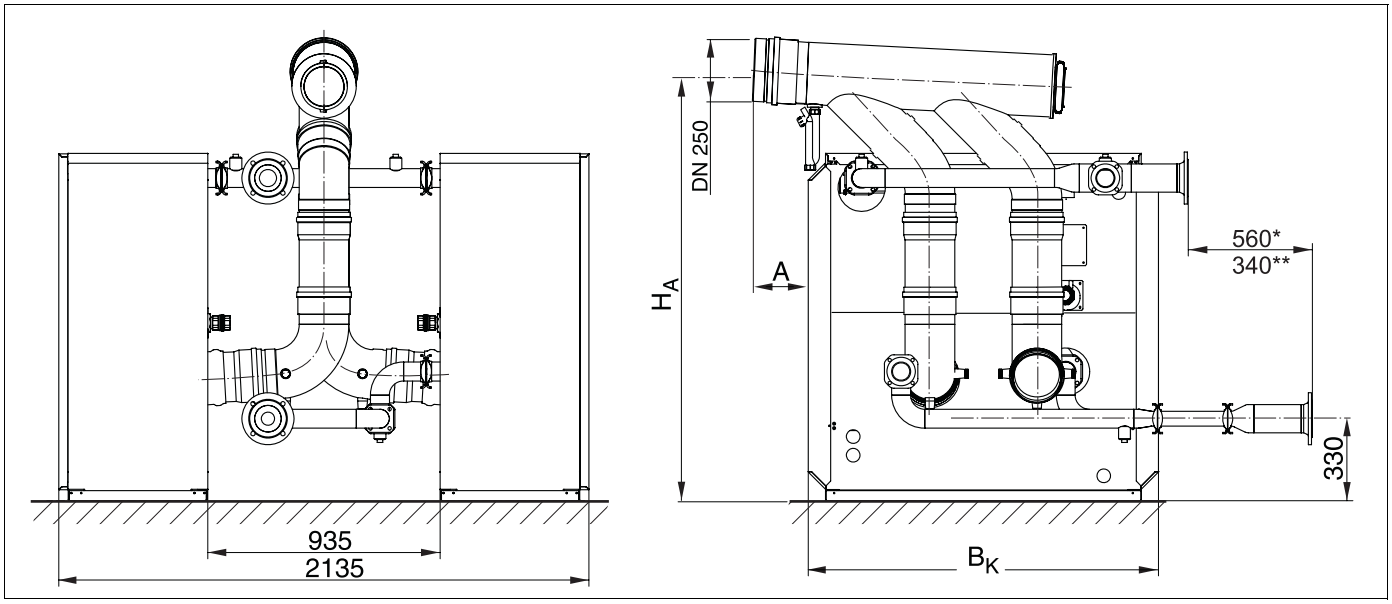

Fig. 3 GB312 (400 to 560 kW) cascade flue gas header dimensions

** when a pump is installed*

*** when a motor ring butterfly valve is installed*

Boiler rating	2 x 200 kW (2 x 6 sect.)	2 x 240 kW (2 x 7 sect.)	2 x 280 kW (2 x 8 sect.)
B_K	1202	1410	1410
A	210	157	106
H_A	1727	1732	1727

Tab. 3 GB312 cascade flue gas header dimensions (in mm)

2 Scope of supply

The boiler and control device are installed as described in the installation instructions supplied with the individual products.

Material		Quantity	Fig. 4 Item
Flue gas header set	Installation instructions		
	Flue gas header	1	1
	45° pipe bend Ø 160	2	2
	87° pipe bend Ø 160	2	3
	Pipe section Ø 160 170 mm net length**	2	4
	Condensate drain/siphon	1	8
	Lubricating grease		
Hose set	Tee	2	5
	Hose clip	8	-
	Condensate pipe 3 m raw length	1	6
	Condensate pipe 0.1 m	1	7

Tab. 4 Cascade flue gas header scope of supply for dual boiler size 180/240/320 kW

*** 250 mm net length for 320 kW dual boiler*

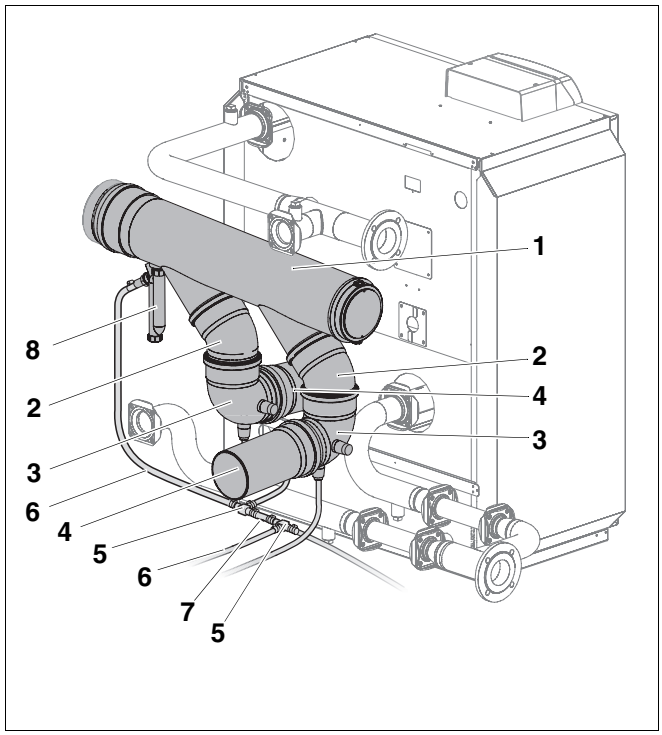

Fig. 4 Cascade flue gas header scope of supply Dual boiler size 180/240/320 kW (values of both dual boilers added together)

Material		Quantity	Fig. 4 Item
Flue gas header set	Installation instructions		
	Flue gas header	1	1
	45° pipe bend Ø 200	2	2
	Pipe section Ø 200, 300 mm net length	2	3
	87° pipe bend Ø 200	2	4
	Pipe section Ø 200, 150 mm net length	2	5
	Condensate drain/siphon	1	9
	Lubricating grease		
Hose set	Tee	2	6
	Hose clamp	8	-
	Condensate pipe 0.1 m	1	7
	Condensate pipe 3 m raw length	1	8

Tab. 5 Cascade flue gas header scope of supply for dual boiler size 400/480/560 kW

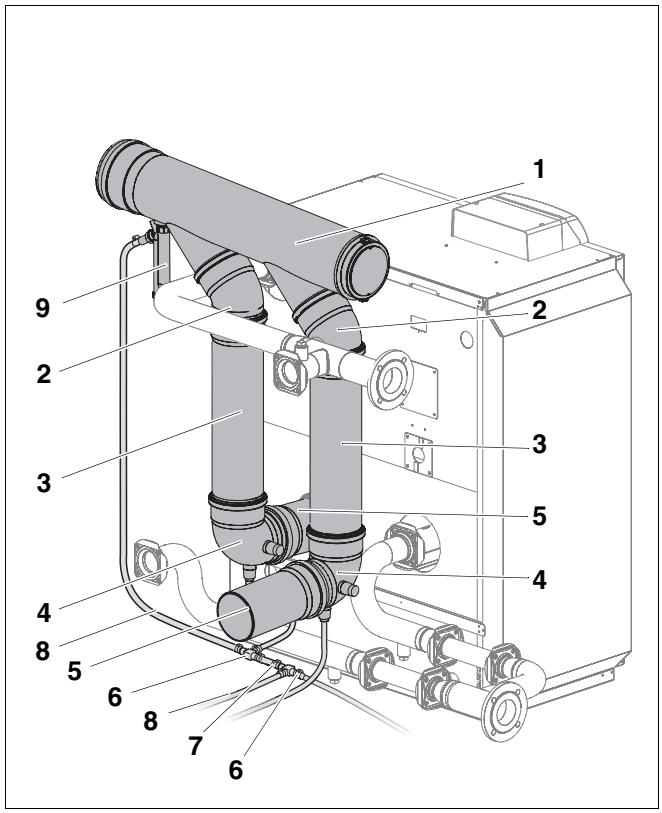

Fig. 5 Cascade flue gas header scope of supply Dual boiler size 400/480/560 kW (values of both dual boilers added together)

3 Installing the flue gas header

Because welding work is required, it is advisable to fit the cascade pipework for the water pipes before fitting the flue gas header.

CAUTION!

SYSTEM DAMAGE

through incorrect installation or operation.

Please observe the boiler installation, maintenance and operating instructions.

USER NOTE

The connections must only be connected to the positions shown in Fig. 6.

	Boiler rating					
	90 - 4	**120 - 4**	**160 - 5**	**200 - 6**	**240 - 7**	**280 - 8**
X_{AA}	332	332	384	436	488	540
H_{AA}	470			495		

Tab. 6 Dimensions in Fig. 6 (in mm)

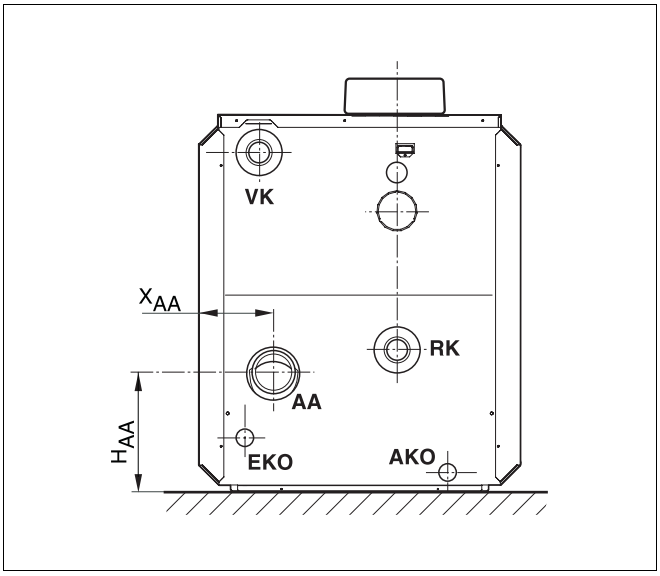

Fig. 6 Logano GB312 boiler connections

Legend for Fig. 6

AA = Flue outlet
EKO = Condensate inlet (pipe bend inlet)
AKO = Condensate outlet
VK = Boiler flow
RK = Boiler return

3.1 Installing the flue gas header for 180, 240 or 320 kW dual boiler

- Apply lubricating grease to pipe sections (Fig. 7, **Item 1**) at the connection points and insert in the flue gas connection of the two boilers.
- Apply lubricating grease to 87° pipe bends (Fig. 7, **Item 3**) at the connection points and push one pipe bend over each pipe section (Fig. 7, **Item 1**) (the coupling points upwards).

USER NOTE

If the flue gas header is to be fitted above the pipework, an extension (1 m pipe section is not part of the scope of supply) can be fitted to the 87° pipe bend (Fig. 7, **Item 3**). In this case, follow the installation instructions for 400 to 560 kW boilers (see section 3.2).

- Apply lubricating grease to 45° pipe bends (Fig. 7, **Item 2**) at the connection points and push over the two lower pipe stubs on the flue gas header (Fig. 7, **Item 4**).
- Push the flue gas header (Fig. 7, **Item 4**) and 45° pipe bend (Fig. 7, **Item 2**) onto the 87° pipe bend (Fig. 7, **Item 3**) fitted earlier.

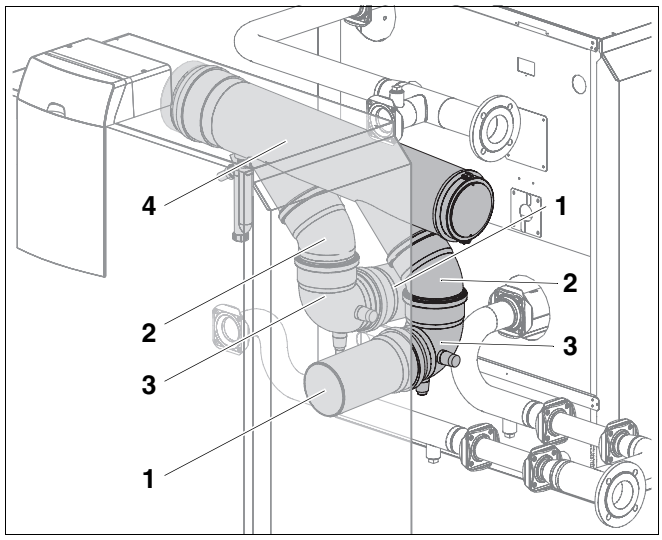

Fig. 7 Installing the flue pipes for 180, 240 or 320 kW dual boilers

Item 1: *Pipe section (250 mm net length for 320 kW dual boiler and 170 mm net length for 180 + 240 kW dual boiler)*

Item 2: *45° pipe bend*

Item 3: *87° pipe bend*

Item 4: *Flue gas header*

3.2 Installing the flue gas header for 400, 480 or 560 kW dual boilers

- Apply lubricating grease to pipe sections (Fig. 8, **Item 4**) at the connection points and insert in the flue gas connection of the two boilers.
- Apply lubricating grease to 87° pipe bends (Fig. 8, **Item 5**) at the connection points and push one pipe bend over each pipe section (Fig. 8, **Item 4**) (the coupling points upwards).
- Apply lubricating grease to pipe sections (Fig. 8, **Item 3**) and push onto the 87° pipe bend (Fig. 8, **Item 5**) fitted earlier.
- Apply lubricating grease to 45° pipe bends (Fig. 8, **Item 2**) at the connection points and push over the two lower pipe stubs on the flue gas header (Fig. 8, **Item 1**).
- Push flue gas header (Fig. 8, **Item 1**) and 45° pipe bend (Fig. 8, **Item 2**) onto the pipe sections (Fig. 8, **Item 3**) fitted earlier.

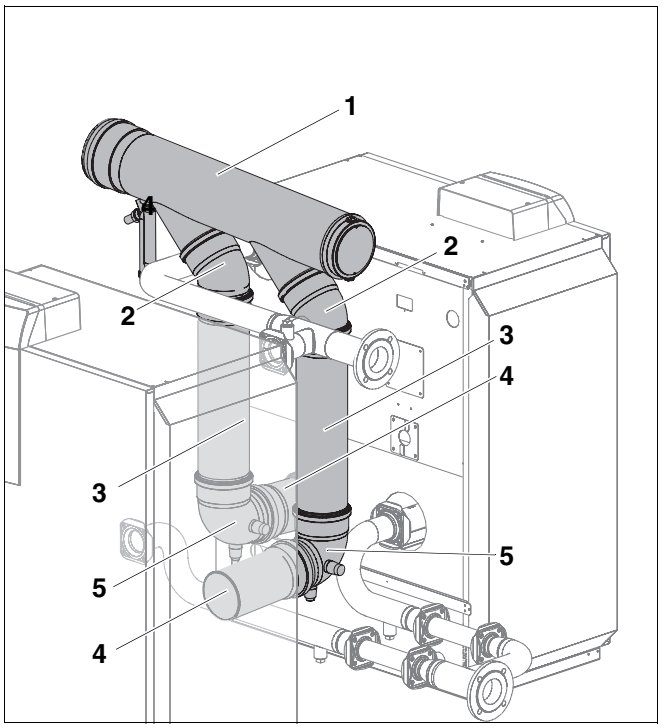

Fig. 8 Installing the flue pipes for 400, 480, 240 or 560 kW dual boilers

Item 1: *Flue gas header*

Item 2: *45° pipe bend*

Item 3: *Pipe section (300 mm net length)*

Item 4: *Pipe section (150 mm net length)*

Item 5: *87° pipe bend*

3.3 Routing condensate pipework

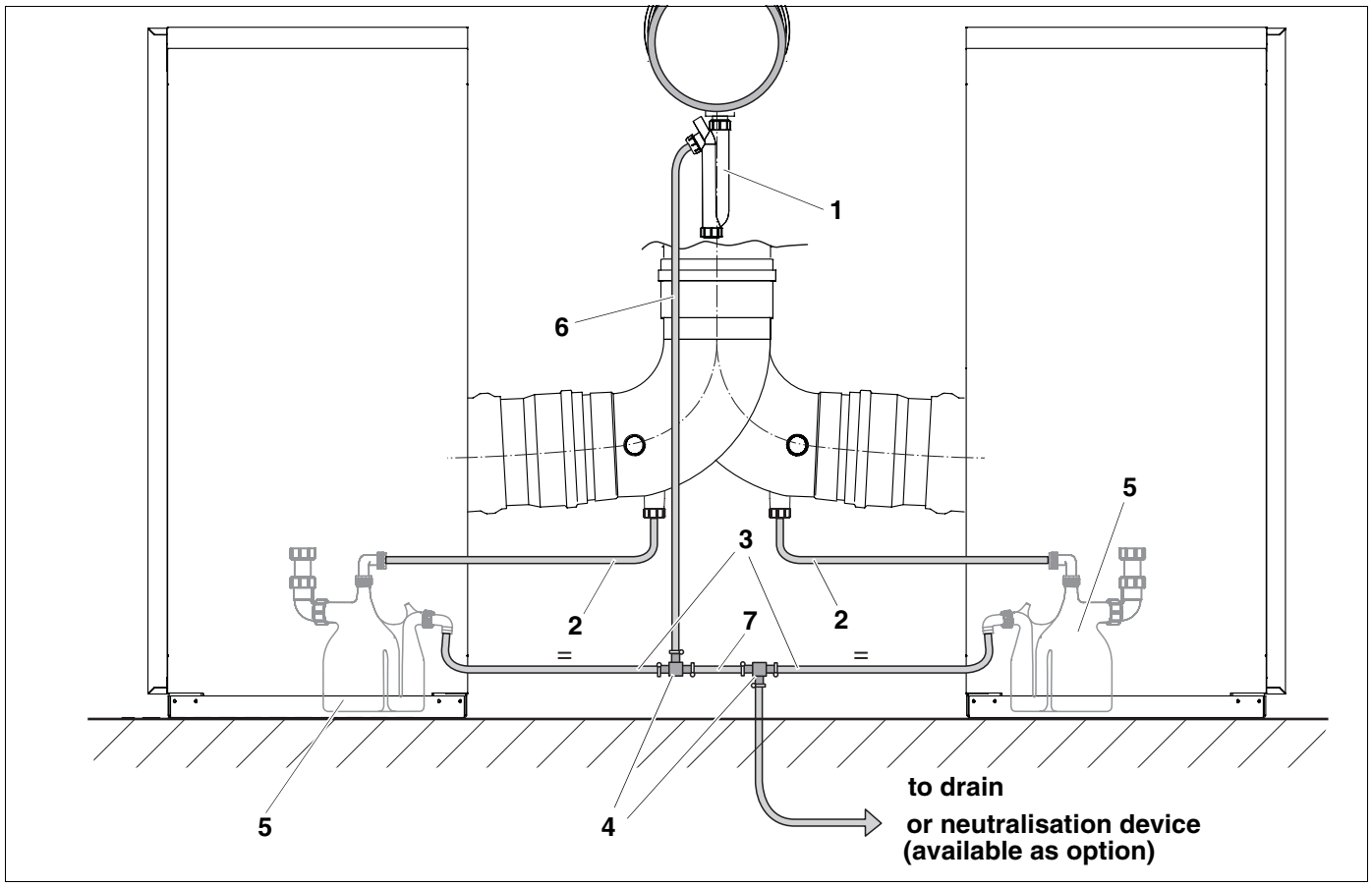

Fig. 9 Condensate pipework (general layout)

Item 1: *Siphon (flue gas header)*

Item 2: *Condensate pipe (boiler or connection elbow scope of supply)*

Item 3: *Condensate pipe, 3 m (= cut to length according to boiler clearance)*

Item 4: *Tee and pipe clips*

Item 5: *Boiler siphon*

Item 6: *Corrugated hose, 1.5 m (flue gas header set scope of supply)*

Item 7: *Condensate pipe, 0.1 m*

- Screw the siphon (Fig. 9, **Item 1**) with inserted gasket onto the flue gas header.
- Route the corrugated hose (Fig. 9, **Item 6**) between the tees (Fig. 9, **Item 4**) and the siphon and secure using a pipe clip.
- Fit the second tee (Fig. 9, **Item 4**) and the condensate pipe (Fig. 9, **Item 7**) to the first tee (see Fig. 9) using pipe clips.
- Cut two further condensate pipes (Fig. 9, **Item 3**) to length according to the boiler clearances and connect between the tees and the boiler siphons (Fig. 9, **Item 5**) according to Fig. 9, and secure using pipe clips.
- Route condensate pipe (Fig. 9, **Item 2**) between the boiler siphon (Fig. 9, **Item 5**) and the pipe bend according to Fig. 9.
- Route the remaining tee connection to the drain or to the neutralisation device (available as option).

4 Testing the system

- Check all connections for leaks.



WARNING!

RISK TO LIFE

from noxious flue gases.

Check the flue gas pipe for leaks when commissioning the firing unit. With a static overpressure of 200 Pa, the gas permeability of the flue gas pipe on the internal surface as opposed to the external surface must not exceed 0.006 l/sm^2.



USER NOTE

Before operating the heating system, read the boiler documentation and observe all standards and guidelines applicable to the use of the heating system in your country.

We reserve the right to make any changes due to technical modifications.

Your local heating contractor:

Buderus

Buderus
Cotswold Way, Warndon, Worcester WR4 9SW
Tel.: 01905 752936, Fax: 01905 753130
www.buderus-commercial.co.uk

In the UK, Buderus is a trading name of
BBT Thermotechnology Ltd.

BBT Thermotechnik GmbH
D-35573 Wetzlar
www.heiztechnik.buderus.de
info@heiztechnik.buderus.de