Buderus

Installation and maintenance instructions

Gas-fired condensing boiler Logano plus GB312



Please read carefully prior to installation and maintenance.

1 Safety . . . 4
- 1.1 About this manual . . . 4
- 1.2 Correct use . . . 4
- 1.3 Key to symbols . . . 4
- 1.4 Please observe these notes . . . 4
  - 1.4.1 Installation tips . . . 5
  - 1.4.2 Tips on the boiler room . . . 5
- 1.5 Tools, materials and accessories . . . 5
- 1.6 Disposal . . . 5

2 Product description . . . 6

3 Specifications . . . 7
- 3.1 Water quality . . . 10
- 3.2 Declaration of conformity . . . 11

4 Scope of supply . . . 12

5 Transporting the boiler . . . 13
- 5.1 Lifting and handling the boiler . . . 13
- 5.2 Transporting the boiler on rollers . . . 14

6 Positioning the boiler . . . 15
- 6.1 Wall clearances . . . 16
- 6.2 Levelling the boiler horizontally . . . 16

7 Boiler installation . . . 17
- 7.1 Information for flue gas and supply air connection . . . 17
  - 7.1.1 Making the flue gas connection . . . 17
  - 7.1.2 Creating the supply air connection (balanced flue operation) . . . 18
- 7.2 Making the water connections . . . 19
  - 7.2.1 Connecting the central heating flow and return . . . 19
  - 7.2.2 Installing the DHW cylinder . . . 21
  - 7.2.3 Installing the safety valve (provided by customer) . . . 21
  - 7.2.4 Installing the condensate drain . . . 22
- 7.3 Filling the heating system and checking for leaks . . . 24
- 7.4 Connecting the fuel supply . . . 25
- 7.5 Providing a mains electrical supply . . . 25
  - 7.5.1 Fitting the control panel . . . 25
  - 7.5.2 Mains power supply and connection of additional components . . . 26
- 7.6 Levelling the boiler vertically . . . 27

8 Starting up the heating system . . . 28
- 8.1 Recording gas characteristics . . . 28
- 8.2 Checking for leaks . . . 28
- 8.3 Purging the gas supply pipe . . . 29
- 8.4 Checking the operating pressure . . . 29
- 8.5 Checking the air supply/ventilation apertures and the flue gas connection . . . 30
- 8.6 Checking the supply air membrane . . . 30
- 8.7 Checking the system equipment . . . 31
- 8.8 Making the heating system operational . . . 32
- 8.9 Commissioning the control device and the burner . . . 32

8.10 Set burner to natural gas L, S or L_W . . . 33
8.10.1 Switching on the boiler on the BC10 . . . 33
8.10.2 Flue gas test . . . 33
8.10.3 Calling up the service level on the RC30 . . . 34
8.10.4 Displaying monitor data on the RC30 . . . 34
8.10.5 Adjusting CO_2 at full load . . . 35
8.10.6 Checking CO_2 setting at partial load . . . 36
8.10.7 Checking CO_2 setting at full load . . . 37
8.11 Recording actual values . . . 37
8.11.1 Change status display on BC10 to the boiler temperature display status . . . 38
8.11.2 Returning to operating mode from the flue gas test . . . 38
8.11.3 Draught . . . 38
8.11.4 Carbon monoxide content . . . 38
8.12 Function checks . . . 39
8.12.1 Checking the ionisation current . . . 39
8.13 Checking the gas connection pressure . . . 41
8.14 Checking for leaks during operation . . . 42
8.15 Installing casing parts . . . 42
8.16 Commissioning report . . . 43

9 Shutting down the heating system . . . 44
9.1 Standard shutdown . . . 44
9.2 Emergency measures . . . 44

10 Boiler inspection and maintenance . . . 45
10.1 Why is regular maintenance important? . . . 45
10.2 General work . . . 46
10.3 Internal leak test . . . 47
10.3.1 Determining the test volume . . . 47
10.3.2 Leak test . . . 48
10.4 Checking the heating system operating pressure . . . 50
10.5 Measuring the carbon dioxide content . . . 50
10.6 Determining the extent of contamination on the burner and heat exchanger and cleaning . . . 51
10.6.1 Determining the extent of contamination . . . 51
10.6.2 Cleaning the burner and heat exchanger . . . 54
10.7 Checking for leaks during operation . . . 59
10.8 Checking the ionisation current . . . 59
10.9 Completing inspection/maintenance . . . 60
10.9.1 Removing meters . . . 60
10.9.2 Installing casing parts . . . 60
10.9.3 Confirming inspection/maintenance . . . 60
10.10 Inspection and maintenance reports . . . 61

11 Troubleshooting . . . 64
11.1 Recognising and rectifying faults . . . 64

12 Sensor curves . . . 65

13 Index . . . 66

1 Safety

1.1 About this manual

These installation and maintenance instructions contain important information for the safe and correct installation, initial start-up and maintenance of this boiler.

In the following, the Logano plus GB312 gas-fired condensing boiler will generally be referred to as the boiler.

These installation and maintenance instructions are designed for specialists, who – due to their training and experience – are knowledgeable in handling heating systems and gas installations.

1.2 Correct use

The boiler is designed for generating heating water and DHW, for example, in homes or apartment buildings.

Only gas provided by public utilities may be used.

Please observe the details on the type plate and the specifications (➔ Chapter 3, page 7) to ensure the correct use of this equipment.

1.3 Key to symbols

The following symbols are used in this manual:



WARNING!

RISK TO LIFE

Identifies possible risks, which may lead to serious injury or death if appropriate care is not taken.



CAUTION!

RISK OF INJURY/ SYSTEM DAMAGE

Identifies potentially hazardous situations, which could lead to medium or slight injuries or to material losses.



USER NOTE

Tip for the optimum utilisation and setting of the control(s) plus other useful information.

➔ Cross-references

Cross-references to a specific point or another document are identified by an arrow ➔.

1.4 Please observe these notes

Observe all local regulations and standards during installation and operation:

– Local building regulations relating to installation, combustion air supply and flue gas systems and connection to a chimney.
– Regulations for the electrical connection to the mains power supply.
– The technical rules of the gas supply company regarding the connection of a gas burner to the mains gas supply.
– Regulations and standards relating to heating system safety equipment.
– In Austria, local building regulations, as well as ÖVGW guideline G1/G2 (ÖVGW-TR gas/LPG) must be observed during installation. Conversion to LPG is permitted.
  The requirements of the national directive, Art. 15a B-VG regarding emissions and efficiency are being met.



USER NOTE

Only use original Buderus components. Losses caused by the use of parts not supplied by Buderus are excluded from the Buderus warranty.



WARNING!

RISK TO LIFE

through the explosion of volatile gases.

There is a risk of explosion if you can smell gas.

- Extinguish all naked flames. Do not smoke. Do not use lighters.
- Prevent sparks.
  Do not operate electrical switches, including telephones, plugs or door-bells.
- Close the main gas shut-off valve.
- Open windows and doors.
- Warn all occupants, but do not use doorbells.
- Call your gas supplier from outside the building!
- If you hear gas escaping, immediately leave the building, prevent others from entering and notify the police and fire brigade from outside the building.

1.4.1 Installation tips



WARNING!

RISK TO LIFE

through the explosion of volatile gases.

- Work on gas components must only be carried out by qualified and authorised personnel.



WARNING!

RISK TO LIFE

from electric shock.

- Only qualified electricians are permitted to carry out electrical work.
- Before you open the control device: Isolate all poles of the mains power supply and secure against unauthorised re-connection.
- Please observe all installation instructions.

1.4.2 Tips on the boiler room



WARNING!

RISK TO LIFE

from poisoning.

In open-flue operation, insufficient ventilation can lead to dangerous flue gas leaks.

- Never block off or obstruct air ducts and vents or reduce their size.
- The boiler must not be operated until the obstruction has been removed.
- Inform the system user in writing of the fault and associated danger.



WARNING!

RISK OF FIRE

from flammable materials or liquids.

- Never store flammable materials or liquids in the immediate vicinity of the boiler.

1.5 Tools, materials and accessories

For the installation and maintenance of the boiler, you will need standard tools as used in central heating as well as oil and water installations.

The following may also prove useful:

– The RC30 programming unit is required as a monitoring device for commissioning, inspecting and maintaining the boiler.



USER NOTE

A PC with the Buderus Logamatic ECO-Soft 4000/EMS and a service key can also be used as a monitoring device.

– 2 pipes (approx. R 1¼, approx. 2 m long) for carrying the boiler or 5 pipes (approx. R 1¼, approx. 0.7 m long) along which it is rolled
– Cleaning blade and/or chemical cleaning agent for wet cleaning

1.6 Disposal

- Dispose of packaging in an environmentally responsible manner.
- Dispose of all heating system components that have to be replaced at an authorised disposal site.

2 Product description

The boiler is a gas-fired condensing boiler with aluminium heat exchanger.

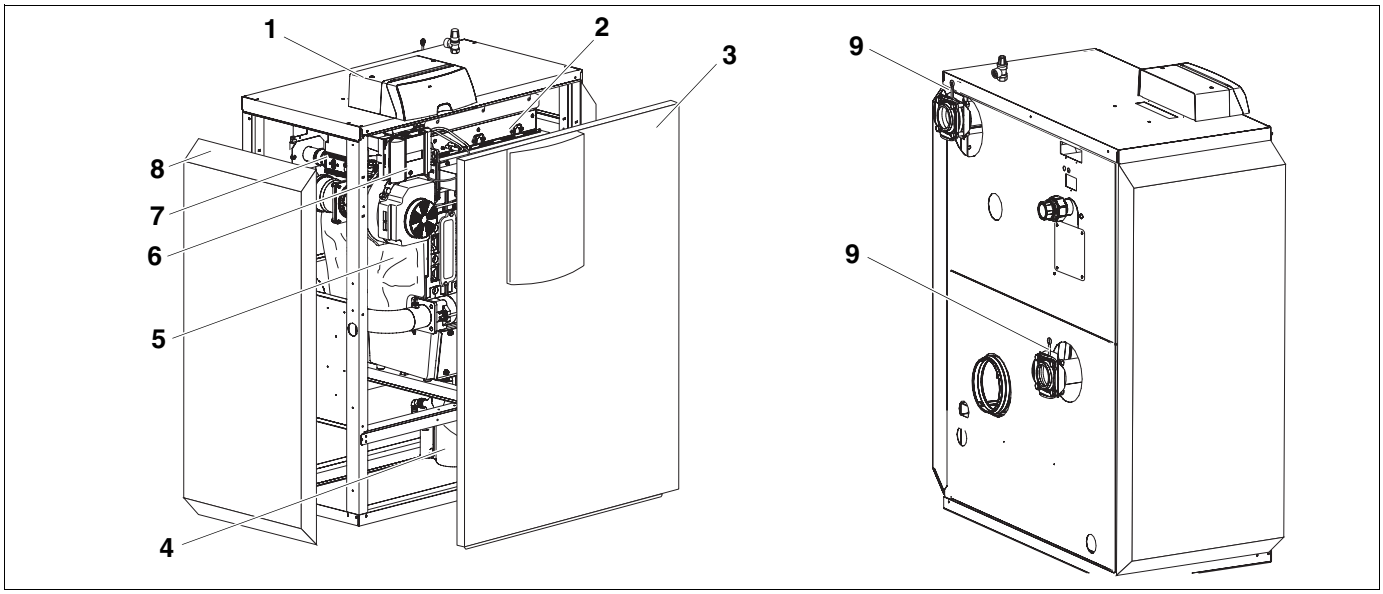

Fig. 1 Logano plus GB312 boiler

1 *Control panel*
2 *Gas burner*
3 *Boiler front panel*
4 *Siphon*
5 *Boiler block with lagging*
6 *Burner control unit*
7 *Gas train*
8 *Boiler casing*
9 *Check valve*

The boiler comprises:

– Control panel
– Frame and casing
– Boiler block with lagging
– Gas burner

The control panel monitors and controls all electrical boiler components.

The boiler block transfers the heat generated by the burner to the heating water. The lagging reduces energy losses.

3 Specifications

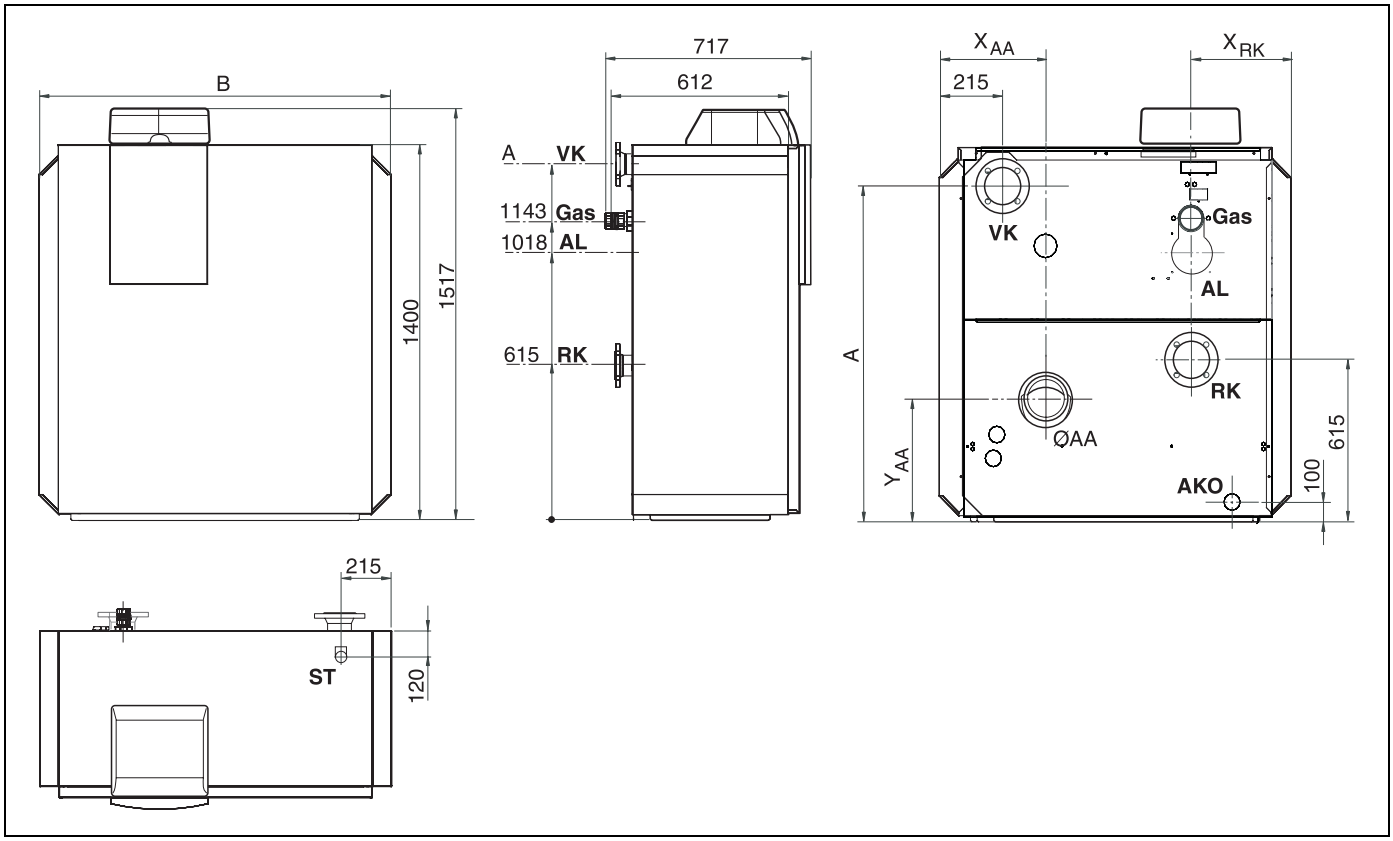

Fig. 2 Dimensions and connections (dimensions in mm)

Connections (for dimensions see the following tables):

AA = Flue outlet
AL = Combustion air pipe connection (balanced flue operation only)
VK = Boiler flow
AKO = Condensate outlet
GAS = Gas connection
ST = Safety valve connection (R 1¼")
RK = Boiler return

Boiler rating		90 - 4	120 - 4	160 - 5	200 - 6	240 - 7	280 - 8
Width B	**mm**	994		1202	1202	1410	1410
Dimension X_{AA}	**mm**	332		384	436	488	540
Dimension X_{RK} (= X_{AL} = X_{GAS})	**mm**	270		374	270	374	270
Dimension A	**mm**	1308		1300			
Flue pipe diameter Ø AA	**DN**	160			200		
Dimension Y_{AA}	**mm**	470			495		
Diameter of combustion air pipe AL (balanced flue only)	**DN**	100					
VK and RK connection		Rp 2" (DN 50)		PN6 standard flange (DN 65)			
Ø GAS		Rp 1½"					

Tab. 1 Measurements and connection dimensions

Boiler rating		90 - 4	120 - 4	160 - 5	200 - 6	240 - 7	280 - 8
Boiler							
Combustion output, full load	**kW**	86.5	116	155	193	232	271
Combustion output, partial load	**kW**	34	34	46	57	69	80
Rated output, full load 80/60 °C	**kW**	84	113	150	187	225	263
Rated output, full load 50/30 °C	**kW**	90	120	160	200	240	280
Flue gas values							
Flue gas temperature, full load 80/60 °C	**°C**	< 70	< 75	< 75	< 75	< 75	< 75
Flue gas mass flow, full load	**g/s**	38.9	53.7	70.2	89.3	107.4	125.4
Available draught in the flue gas system	**Pa**	100	100	100	100	100	100
Gas							
Fan		G1G 170					
Gas train		Kromschröder CG15	Kromschröder CG15	Kromschröder CG20	Kromschröder CG20	Kromschröder CG25	Kromschröder CG25
Gas throttle diameter	**mm**	15.8	15.8	14.85	14.2	13.6	12.6
Type (according to DVGW regulations)		B_{23}, $C_{13(x)}$, $C_{23(x)}$, $C_{33(x)}$, $C_{43(x)}$, $C_{53(x)}$, $C_{63(x)}$, $C_{73(x)}$, $C_{83(x)}$ open-flue and balanced flue operation					
CO_2 content, full load with natural gas	**%**	9,1					
CO_2 content, partial load for natural gas	**%**	9,3					
Heating water circuit							
Boiler water capacity	**l**	16	16	20	24	27	30
Primary pressure drop	**mbar**	see diagram, page 9					
Max. flow temperature [1]	**°C**	80					
STB safety temperature	**°C**	100					
Permissible operating temperature	**bar**	4					
Electrical specification							
Safety class		IP40					
Mains electrical connection	**V/Hz**	230/50					
Power consumption, full load	**W**	84	150	190	230	270	330
Power consumption, partial load	**W**	40	40	45	50	50	50
Boiler dimensions and weight							
Insert measurements width × depth × height	**mm**	851 × 612 × 1400		1059 × 612 × 1400		1267 × 612 × 1400	
Weight	**kg**	205	205	240	265	300	330

Tab. 2 Specifications

[1] *STB safety temperature 100 °C*

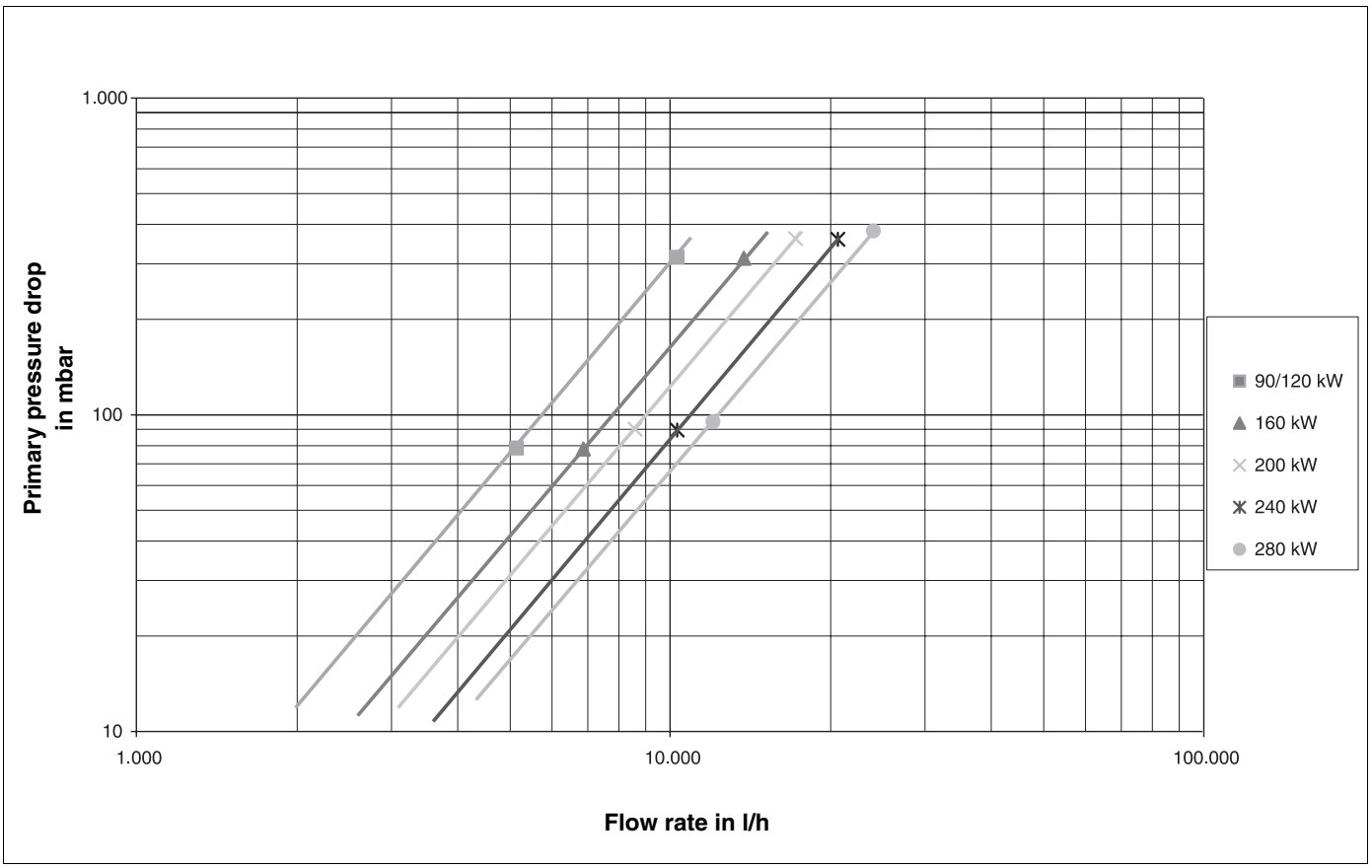

Fig. 3 Heating water flow resistance GB312 with check valve

Boiler rating	Gas throughput	
	Natural gas H (G20)	Natural gas L (G25)
	m^3/h	m^3/h
90 - 4	9.0	10.5
120 - 4	11.5	13.5
160 - 5	15.5	18.0
200 - 6	19.5	22.5
240 - 7	23.5	27.0
280 - 8	26.5	31.5

Tab. 3 Gas throughput (relative to 15 °C gas temperature and 1013 mbar air pressure)

Country	Mains connection pressure P in mbar	Gas category	Gas type already set on the boiler, or corresponding gas type conversion sets supplied	Set to mains connection pressure if supplied in mbar *
DE	20	I_{2ELL}	2 E G20	20
AT, CH, SK	20	I_{2H}	2 H G20	20
ES, GB, IE, IT, PT, SI, TR	20	I_{2H}	2 H G20	20
EE, DK, FI, LT, LV, NO, SE	20	I_{2H}	2 H G20	20
FR	20	I_{2Er}	2 Es G20	20
BE	20	$I_{2E(R)B}$	2 Es G20	20
CZ	18	I_{2H}	2 H G20	18
LU	20	I_{2E}	2 E G20	20
NL	25	I_{2L}	2 L G25	25
PL	20	I_{2ELw}	2 E G20	20
HU	25	I_{2HS}	2 H G20	25

Tab. 4 Country-specific gas categories and supply pressures

** The gas supplier must guarantee the min. and max. pressures (acc. to national regulations for public gas supply).*

The boiler has been set at the factory for natural gas H/E (G20, 20 mbar).

3.1 Water quality

As the water used for heat transfer is not pure, close attention must be paid to the water quality. Poor water quality can damage heating systems due to scale formation and corrosion.

For further details, please see operator's log.

3.2 Declaration of conformity

CE This product meets all the essential requirements of the relevant standards and directives.

Buderus

Konformitätserklärung

Declaration of conformity

Déclaration de conformité

Wir
We
Nous

BBT THERMOTECHNIK GMBH, D-35573 Wetzlar

erklären in alleiniger Verantwortung , dass die Heizkessel-Reihe
declare under our responsibility that the boiler series
déclarons sous notre seule responsabilité que le serié des chaudiers

Logano plus GB 312

konform ist mit den Anforderungen der Richtlinien
is in conformity with the requirements of the directives
est conforme aux exigences des directives

Richtlinie Directive Directive		Norm Standard Norme	Bemerkung Remark Remarque
90/396/EEC	gas appliance directive	EN 483 EN 677	Notified Body: 0085
92/42/EEC	boiler efficiency directive	-	Notified Body: 0085
73/23/EEC	low voltage directive	EN 50165	-
89/336/EEC	EMC directive	EN 55014-1 EN 55014-2 EN 61000-3-2 EN 61000-3-3	-

Ergänzung für Deutschland :
Supplement for Germany :
Supplément pour l'Allemagne :

- EnEV vom 16.11.2001 : Brennwertkessel nach § 2, Abs. 11
- 1.BImSchV vom 07.08.1996 : NOx < 80 mg/kWh (Erdgas) gemäß § 7, Abs. 2

Wetzlar, 06.07.2005

BBT THERMOTECHNIK GMBH

Geschäftsführung Dr. Schulte

Produktentwicklung Ripplinger

Fig. 4 Declaration of conformity

4 Scope of supply

- After delivery, check all packaging for perfect condition.
- Check that the delivery is complete.

Component	Piece	Packaging
Completely assembled boiler with casing	1	1 carton on a pallet
Technical documentation	1	1 foil pack
Set of adjustable feet	1	1 foil pack

Tab. 5 Scope of supply

Accessories

The following components are available as accessories:

Component	Piece
Safety valve R 1¼ *	1
Boiler connection elbow	1
Boiler connector	1

Tab. 6 Essential accessories

** The safety valve is required for safe and proper functioning.*

5 Transporting the boiler

This section explains how to transport your boiler safely.

CAUTION!

SYSTEM DAMAGE

through impact.

- Please observe the handling instructions on the packaging to protect components susceptible to impact damage.

USER NOTE

- Protect connectors against dirt if the boiler is not immediately taken into use.

USER NOTE

Dispose of packaging in an environmentally responsible manner.

5.1 Lifting and handling the boiler

The boiler can be carried to the boiler room using two pipes (R 1¼, ca. 2 m long).

- Unscrew the locking screw from the top centre of the boiler front panel.
- Slightly lift the front panel and remove by pulling towards you.
- Unscrew the locking screws from the side panels at the front and back of the boiler.
- Slightly lift the side panels and remove.

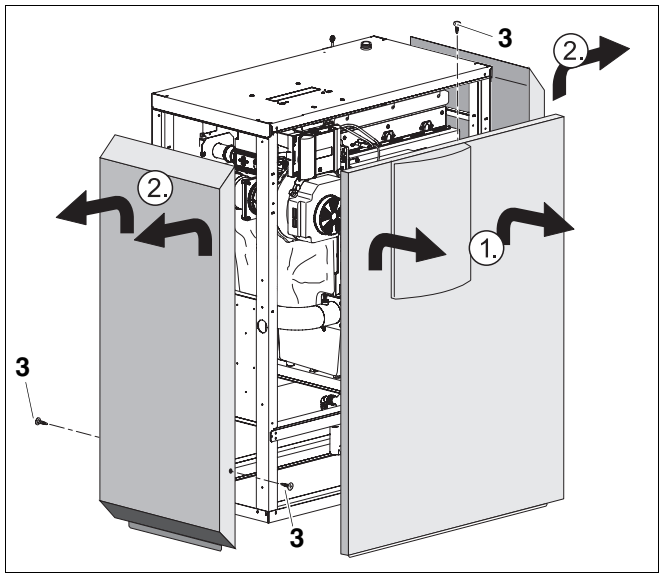

Fig. 5 Removing front and side panels

1 *Front panel*

2 *Side panel*

3 *Locking screw*

- To lift the boiler from the pallet, both locking screws on the bottom of the boiler must be unscrewed.

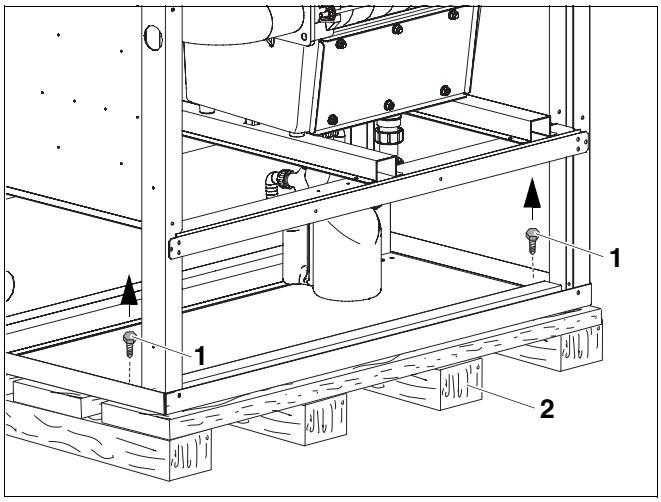

Fig. 6 Unscrew the boiler from the pallet

1 *Locking screw*

2 *Pallet*

CAUTION!

RISK OF INJURY

through carrying heavy loads.

- The equipment must always be lifted and carried by more than one person using the handle positions shown.
- Secure the boiler against slipping.

- Push the pipes through the holes at the front and rear of the boiler (➔ Fig. 7).
- Secure the pipes at the positions shown in Fig. 7 against slipping, using adhesive tape for example.
- Carry the boiler to the boiler room.

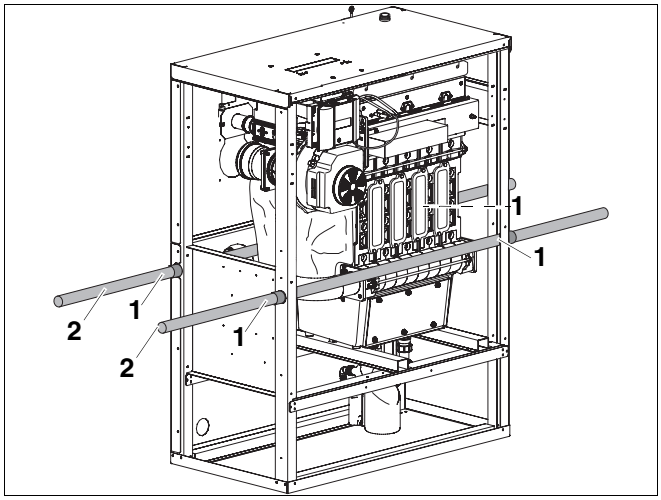

Fig. 7 Transporting the boiler using pipes

1 *Positions for securing the boiler against slipping*

2 *Pipe*

5.2 Transporting the boiler on rollers

If the path to the boiler room is level, the boiler can also be rolled. At least 5 pipe sections of approx. 70 cm in length (diameter R 1¼) are required to form the roller track.

- Lay the pipe sections approx. 40 cm apart on the floor.
- Lift the boiler onto the pipe sections and carefully transport to the boiler room.

USER NOTE

You can also use standard transport rollers. Ensure even weight distribution on the bearing parts, so that the bottom plate is not pressed in.

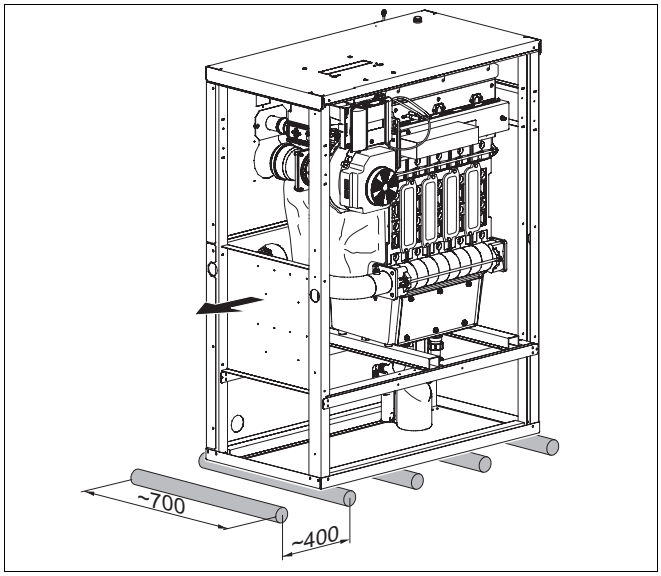

Fig. 8 Transport the boiler on rollers (measurements in mm)

6 Positioning the boiler

This section details how to install and position the boiler inside the boiler room.



WARNING!

RISK OF FIRE

from flammable materials or liquids.

- Never store flammable materials or liquids in the immediate vicinity of the boiler.



CAUTION!

SYSTEM DAMAGE

through frost.

- Install the boiler in a room where it is safe from the risk of freezing.



CAUTION!

BOILER DAMAGE

through contaminated combustion air.

- Never use chlorinated cleaning agents or halogenated hydrocarbons (as, for example, contained in spray cans, solvents or cleaning agents, paints and adhesives).
- Avoid frequent very dusty atmospheres.

6.1 Wall clearances

Where possible install the boiler with the recommended wall clearances (➔ Tab. 7). Reducing the minimum clearances makes the boiler more difficult to access.

The base or foundation on which the boiler is to stand must be perfectly flat and level.

Dimension	Wall clearance	
	minimum	recommended
A	500	700
B	550	700
C	100	500
D	500	700

Tab. 7 Recommended and minimum wall clearances (dimensions in mm)

USER NOTE

Where applicable, allow extra wall clearances for additional components, for example DHW cylinder, pipe connections, flue gas silencer or other components on the flue gas side.

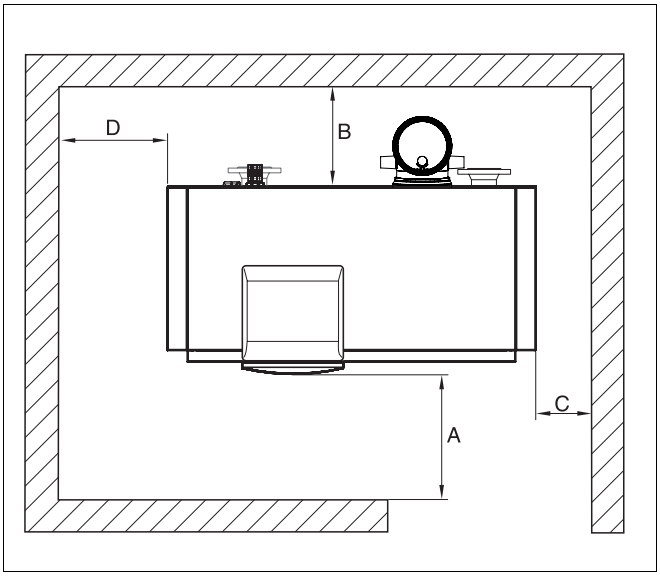

Fig. 9 Boiler room clearances (boiler positioned on the left-hand or right-hand side)

6.2 Levelling the boiler horizontally

CAUTION!

BOILER DAMAGE

if floor does not have sufficient load-bearing capacity.

- The boiler must be placed on a suitable surface.

The boiler must be levelled horizontally so that no air can collect in the boiler block.

- Position the boiler in its final location.
- Turn the adjustable feet into or out of the boiler as required to level the boiler horizontally. Use a spirit level to check the boiler is level.

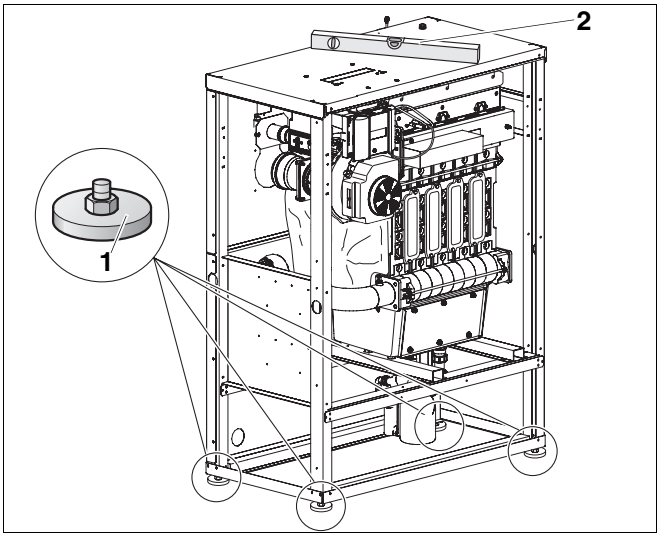

Fig. 10 Levelling the boiler

1 *Adjustable feet*

2 *Spirit level*

7 Boiler installation

This section details how to install your boiler correctly.
These details include:

– Flue gas connection
– Water connections
– Electrical connection
– Fuel connection

7.1 Information for flue gas and supply air connection

7.1.1 Making the flue gas connection

WARNING!

RISK TO LIFE

through toxic flue gases.

- Ensure that the gaskets in the flue gas connections are present, undamaged and correctly positioned.

In different countries, different requirements apply to the flue gas connection.

CAUTION!

BOILER DAMAGE

through condensate.

The condensate that forms in the flue pipe must be drained away from the boiler.

A boiler connection elbow/boiler connector is available as an accessory.

If this accessory is not available in your country, ask your Buderus sales office about alternatives.

- Insert the boiler connection elbow (accessory) to the flue gas connection.
- Create the flue gas connection in accordance with the requirements applicable in your country.

Observe the following during the installation of the flue gas connection:

– The flue pipe cross-section must comply with all current regulations.
– Select the shortest possible flue pipe run.
– Lay the flue pipes so that they slope upwards.

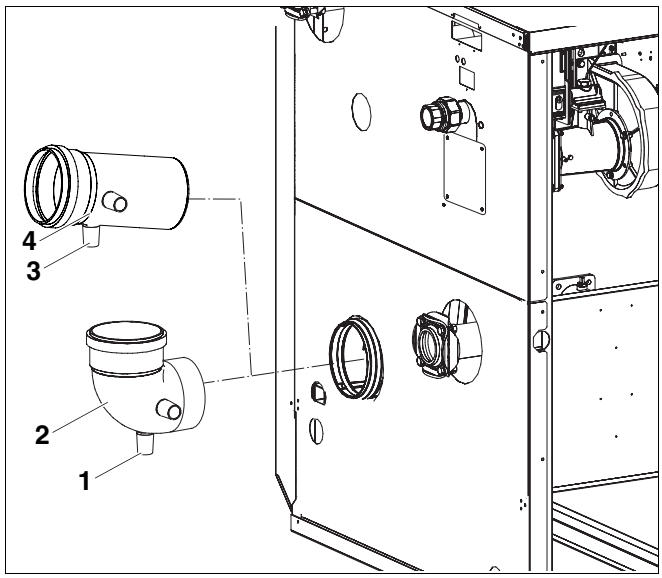

Fig. 11 Fitting the flue gas connection

1 *Condensed water discharge on boiler connection elbow*
2 *Boiler connection elbow (accessory)*
3 *Condensed water discharge on boiler connector*
4 *Boiler connector (accessory)*

7.1.2 Creating the supply air connection (balanced flue operation)

The combustion air is supplied to the boiler either through an outer wall connection, a shaft or through a separate pipe in the shaft.

For balanced flue operation, the supply air connection elbow RLU is available as an accessory.

- Remove side panel if not already removed.
- Remove cover from rear panel.

USER NOTE

- To avoid problems when installing the gas connection, fit the connection of the supply air connection elbow RLU to the right or left.

- Insert supply air connection elbow RLU through the rear panel into the air inlet connector.
- Create air supply connection as far as supply air connection elbow RLU using a standard air supply system that conforms to the requirements applicable in your country.

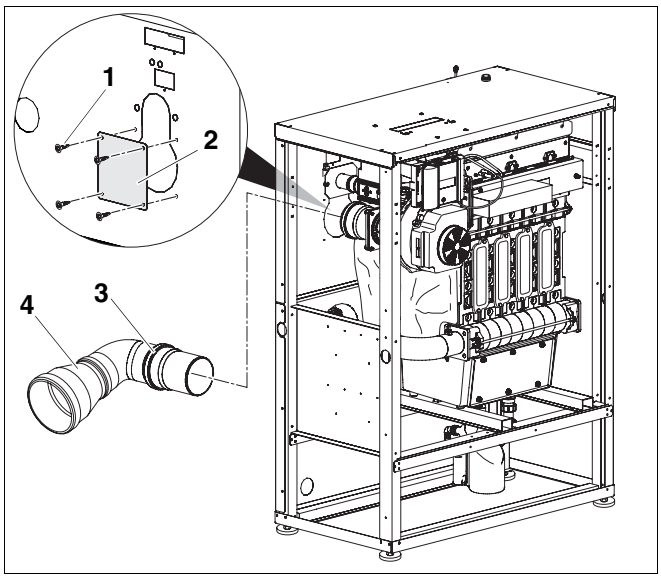

Fig. 12 Creating the supply air connection for balanced flue operation

1 *Screw*
2 *Cover*
3 *Supply air connection elbow RLU (accessory)*
4 *Adapter (accessory)*

7.2 Making the water connections

CAUTION!

SYSTEM DAMAGE

through leaking connections.

- Connect the pipes without stress to the boiler connections.

7.2.1 Connecting the central heating flow and return

Boiler output	Boiler flow (VK) Boiler return (RK)	
90 – 120 kW	DN 50	Rp 2"
160 – 280 kW	DN 65	PN6 standard flange

Tab. 8 Water connection dimensions

USER NOTE

We recommend the on-site installation of a dirt trap (accessory) into the central heating return to prevent contamination on the water side.

CAUTION!

SYSTEM DAMAGE

through leaking connections.

- If you loosen one of the fittings after it has already been tightened, you must insert a new gasket before tightening again.
- Please note that the flanges in the flow and return are only loosely screwed on, and must only be tightened once the flow and return have been fitted.
- Check the gaskets and the connections on the boiler for any damage before installing the pipework.

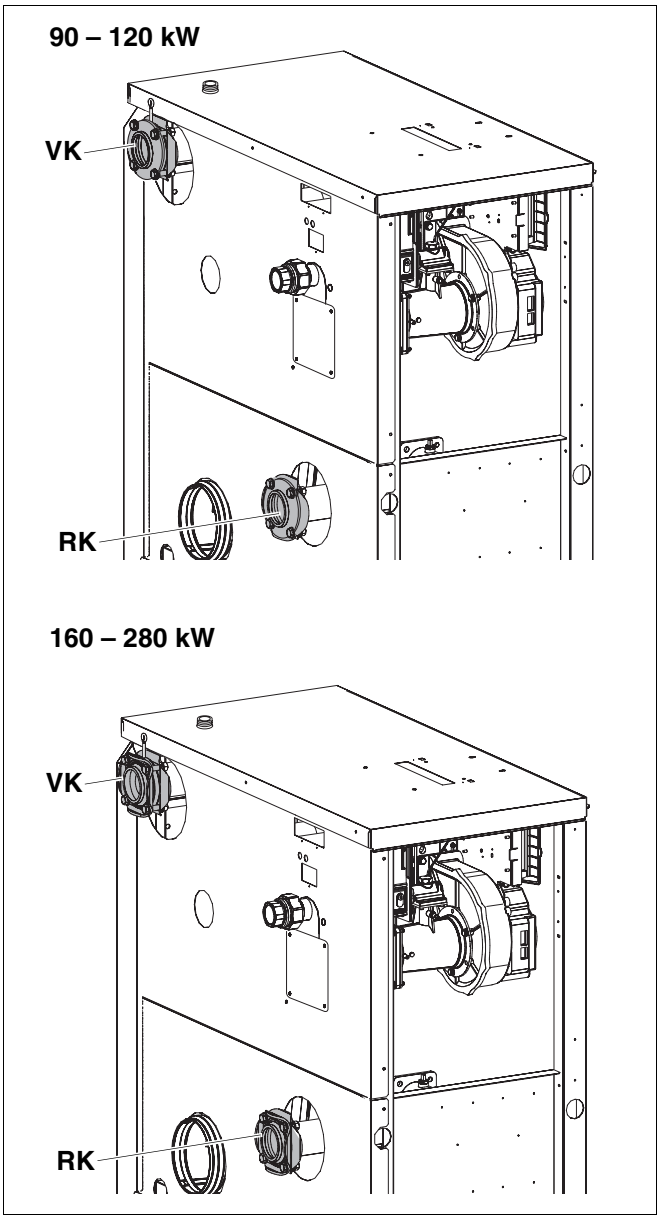

Fig. 13 Water connections
RK: Boiler return
VK: Boiler flow

Connecting the heating flow

- Unscrew the mating flange on the flow.
- Attach mating flange to the flow pipe (provided by customer) (➔ Tab. 8, page 19).

CAUTION!

SYSTEM DAMAGE

through incorrectly installed (or missing) check valve.

Please note that the arrow on the check valve indicates the flow direction. Going against the direction shown by the arrow will block the check valve.

- Install the check valve with the flow direction away from the boiler (note the arrow on the check valve).
- Insert gasket between the mating flange and check valve.
- Insert gasket between flange on the boiler and check valve.
- Screw on the flanged connector using four screws with washers and four nuts with washers.

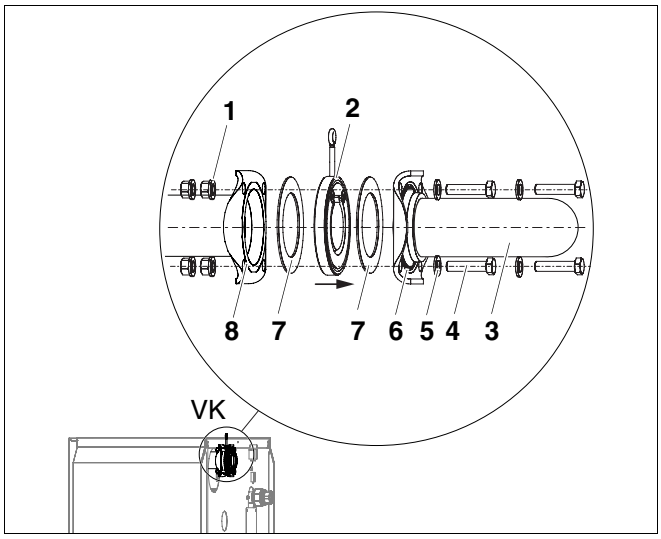

Fig. 14 Installing the flow

1 *Nut and washer x 4*
2 *Check valve x 1*
3 *Flow pipe (provided by customer)*
4 *Screw x 4*
5 *Washer x 4*
6 *Mating flange x 1*
7 *Gasket x 2*
8 *Flange on the boiler flow x 1*

Connecting the heating return

- Unscrew the mating flange from the return.
- Attach mating flange to the return pipe (provided by customer) (➔ Tab. 8, page 19).
- Insert gasket between flange on the boiler and mating flange.
- Screw on the flanged connector using four screws with washers and four nuts with washers.

7.2.2 Installing the DHW cylinder

You can also connect a DHW cylinder to the VK and RK connections. The external cylinder loading pump can be controlled by the control panel.

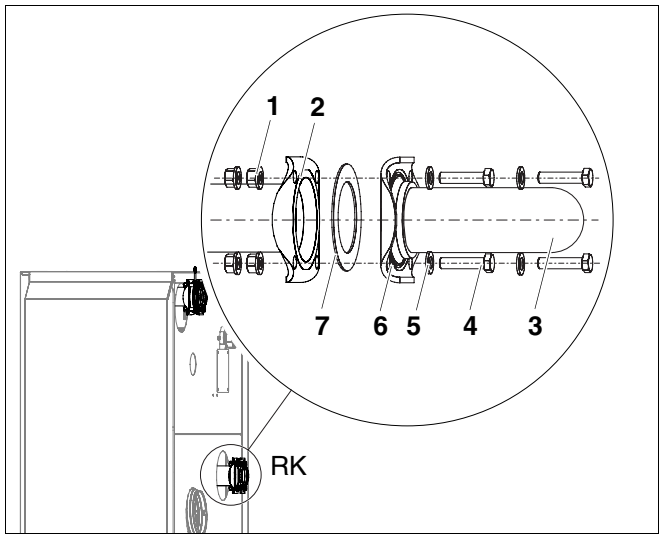

Fig. 15 Fitting return

1 *Nut and washer x 4*
2 *Flange on the boiler return x 1*
3 *Return pipe (provided by customer)*
4 *Screw x 4*
5 *Washer x 4*
6 *Mating flange x 1*
7 *Gasket x 1*

7.2.3 Installing the safety valve (provided by customer)

- Seal safety valve (required accessory) into safety connection on the flow (on the top of the boiler).

SYSTEM DAMAGE

through incorrect installation.

CAUTION! The safety valve must be installed in the heating flow.

- Ask the customer to fit a blow-off line to the safety valve.

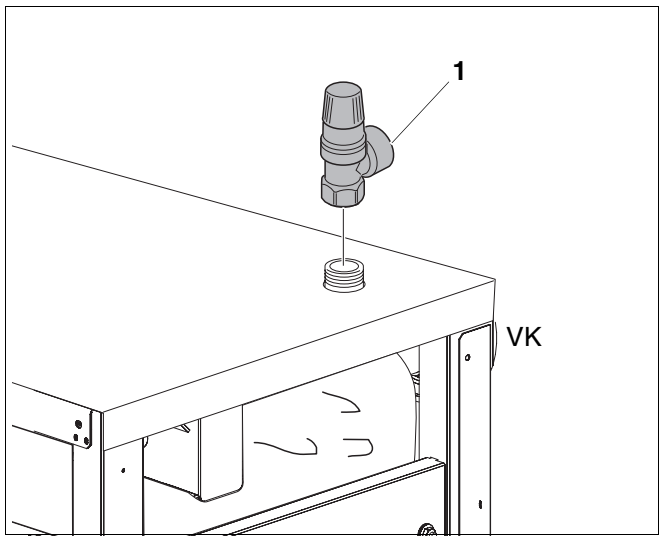

Fig. 16 Installing the safety valve

1 *Safety valve R 1¼ (required accessory)*

7.2.4 Installing the condensate drain

The condensate from the flue gas connecting branch can be diverted via the internal siphon.

USER NOTE

- Carefully drain the condensate created inside the boiler and possibly in the flue pipe.
- Drain the condensate into the public sewerage system in accordance with the requirements in your country.
- Please also observe all regional regulations.

- Dismantle the siphon.
- Fill siphon with approx. two litres of water.
- Unscrew locking cap and remove sealing disc. Fit locking cap to connection if the condensate is to be diverted from the flue gas system via the internal siphon.

RISK TO LIFE

from poisoning.

WARNING!

- If the internal siphon is not being used, divert the condensate from the flue gas system via a separate siphon.

- Refit the siphon.

RISK TO LIFE

from poisoning.

WARNING! Siphons which are not filled with water, or open connections, can cause a risk to life through escaping flue gas.

- Fill the siphon with water.
- Ensure that the siphon and flue gas connections are sealed.
- If the condensate from the flue gas system is not to be fed in via the internal siphon, ensure that the sealing disc together with gasket is sitting in the locking cap.

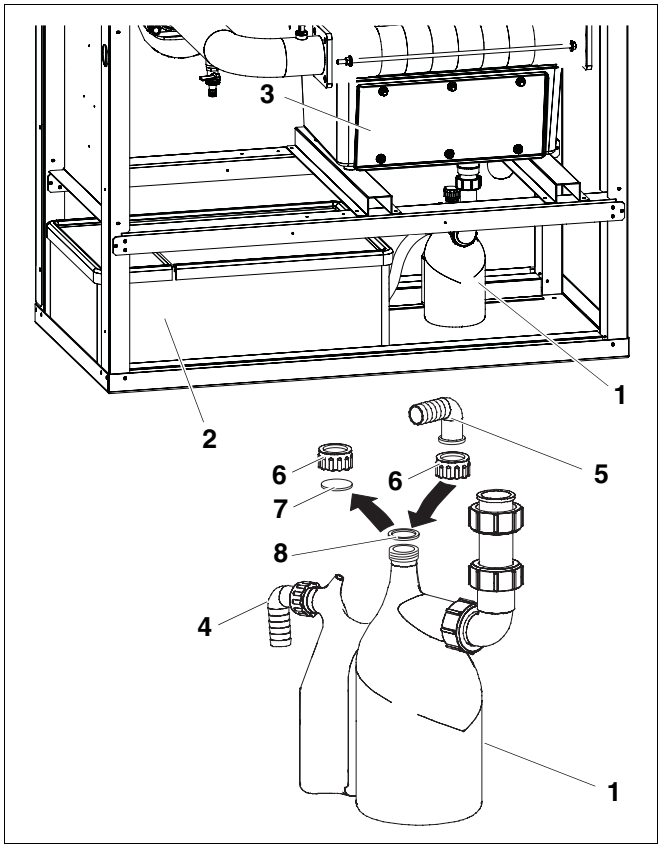

Fig. 17 Installing the condensate drain

1 *Siphon*
2 *Neutralisation device (accessory)*
3 *Condensate tray*
4 *Siphon outlet to neutralisation device/waste water pipe*
5 *Siphon connection for the hose to the flue gas connecting branch*
6 *Locking cap*
7 *Sealing disc*
8 *Gasket*

BOILER DAMAGE

through condensate.

CAUTION! The condensate that forms in the flue pipe must be drained away from the boiler.

The boiler connection elbow (flue gas accessory), the boiler connector (flue gas accessory) or an on-site connector with condensate discharge can be connected to the boiler.

- Fit hose to the boiler connection elbow (flue gas accessory).
- Fit hose to the siphon.
- Connect siphon outlet to the neutralisation device (accessory) (➔ Fig. 17, page 22) or directly to a waste water pipe.

USER NOTE

Neutralisation devices are available as an accessory and can be fitted inside the boiler casing.

RISK TO LIFE

from poisoning.

WARNING! Siphons which are not filled with water, or open connections, can cause a risk to life through escaping flue gas.

- Fill the siphon with water.
- Ensure that the siphon and flue gas connections are sealed.

- Install neutralisation device (accessory) as detailed in the installation instructions.
- Fit siphon provided to the outlet on the condensate tray.

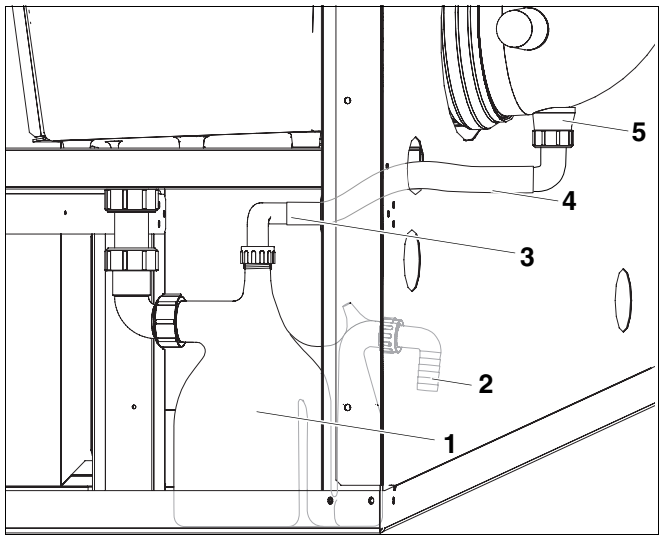

Fig. 18 Installing the condensate drain

1 *Siphon*

2 *Siphon outlet to neutralisation device/waste water pipe*

3 *Siphon connection for the condensate discharge from the boiler connection elbow/connector*

4 *Hose*

5 *Condensate discharge (flue gas accessory)*

7.3 Filling the heating system and checking for leaks

CAUTION!

SYSTEM DAMAGE

through boiler scaling.

- For details, please see the operator's log.

Before taking the heating system into use, check it for soundness to avoid leaks occurring during operation. Pressurise the heating system to 1.3x permissible operating pressure (observe the safety pressure of the safety vale).

CAUTION!

SYSTEM DAMAGE

through overpressure during leak testing.

Pressure, control and safety equipment may be damaged through excessive pressure.

- When you carry out a leak test, make sure that no pressure, control or safety equipment is fitted which cannot be isolated from the boiler water chamber.

- Open the mixing and shut-off valves on the hot water (primary) side.
- Connect the hose to the mains water tap. Push a hose filled with water onto the hose ferrule of the boiler fill & drain valve, fasten with a hose clip and open the valve.
- Slowly fill the heating system. Observe the pressure gauge whilst filling.
- Close the water tap and the boiler fill & drain valve once the required testing pressure has been reached.
- Check the connections and pipework for leaks.
- Bleed the system via the radiator bleed valves.
- Top up with water if the pressure drops as a result of bleeding the system.
- Take the hose off the boiler fill and drain valve.

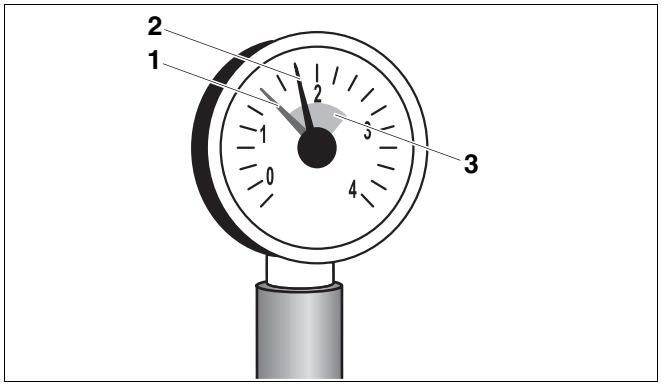

Fig. 19 Pressure gauge for sealed systems

1 *Red needle*

2 *Pressure gauge needle*

3 *Green field*

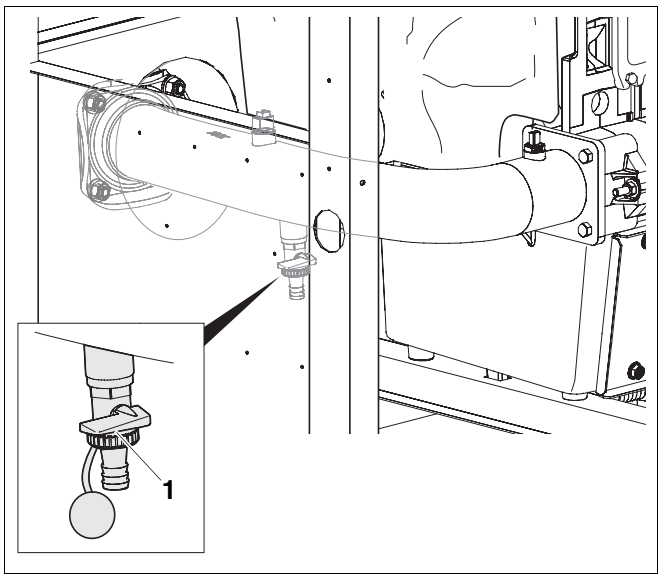

Fig. 20 Boiler fill & drain valve on the return

1 *Boiler fill & drain valve*

7.4 Connecting the fuel supply

Make the gas connection in accordance with all locally applicable regulations.

- Install the gas shut-off valve into the gas supply pipe.
- Connect the gas pipe without stress to the gas connector.

USER NOTE

Buderus recommends the installation (in accordance with local regulations) of a gas filter into the gas supply pipe.

7.5 Providing a mains electrical supply

WARNING!

RISK TO LIFE

from electric shock.

- Only qualified electricians are permitted to carry out electrical work.
- Before you open the control device: Isolate all poles of the mains power supply and secure against unauthorised re-connection.
- Please observe all installation instructions.

7.5.1 Fitting the control panel

- Locate the push-in hooks of the control device in the slots.
- Push the control panel towards the front of the boiler.
- Push the control device down until the locking tabs click into place in the openings.

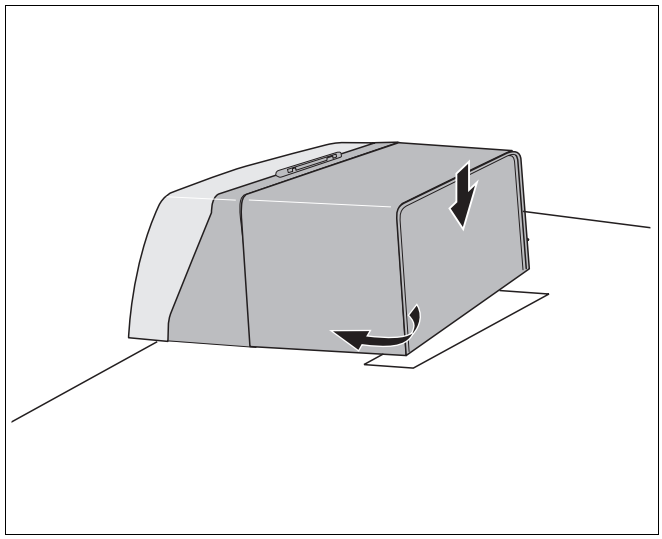

Fig. 21 Fitting the control panel (Logamatic MC10)

7.5.2 Mains power supply and connection of additional components

USER NOTE

You can fit up to four modules (accessory) to the boiler at the position shown in Fig. 22.

- When installing a module, please observe the accompanying instructions.

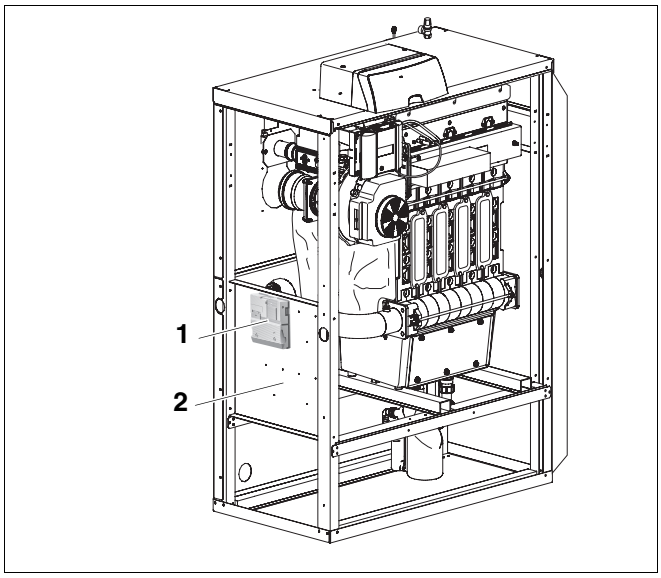

Fig. 22 Fitting modules

1 *Module (accessory)*

2 *Mounting plate*

- Undo the two screws on the control panel cover and remove the cover.

Create a permanent mains power connection in accordance with local regulations.

WARNING!

RISK OF FIRE

Hot components may damage electrical cables and leads.

- Ensure that all cables/leads are routed in the cableways provided; alternatively on top of the lagging of the boiler.

- Route all cables through the cable entries to the control device and connect in accordance with the wiring diagram.

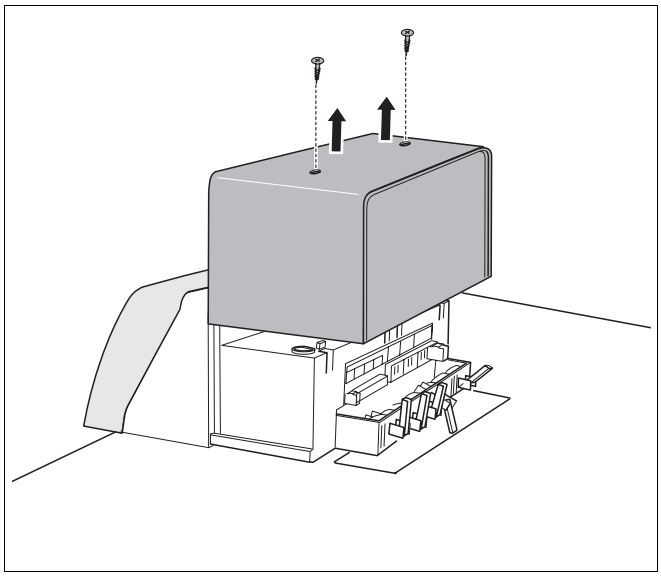

Fig. 23 Removing the cover

Secure all cable runs with cable clips (standard control device delivery):

- Insert the cable clips together with the cable from the top into the slots in the frame (step 1).
- Push the cable clip down (step 2).
- Push against the clip (step 3).
- Flick the toggle up (step 4).

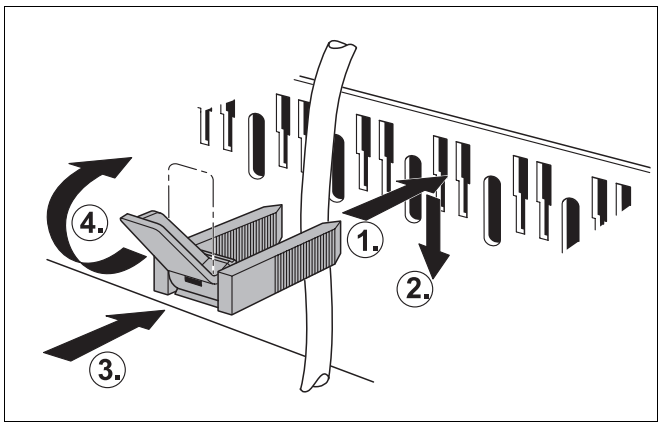

Fig. 24 Securing cables with a cable clip

- Push the control panel cover down into the guide rails.
- Tighten two screws to secure control panel cover.

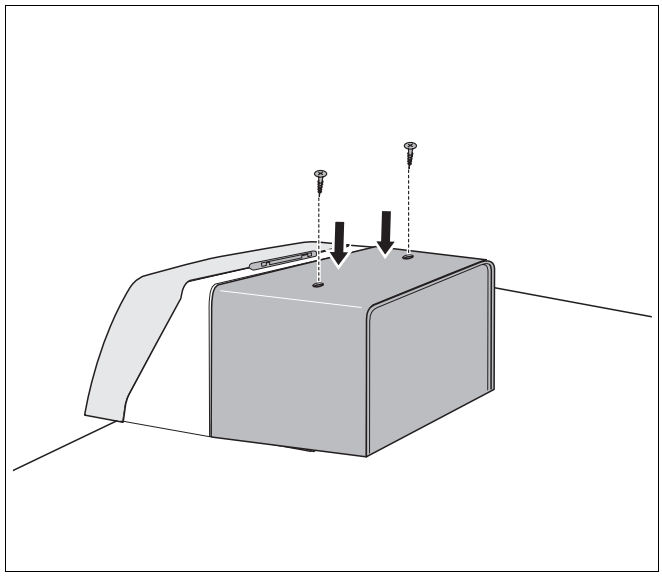

Fig. 25 Cover installation

7.6 Levelling the boiler vertically

The boiler must be levelled vertically so that the side panels and front panel can be attached.

- Loosen the nuts.
- Screw the screws in or out as required to level the boiler vertically. Check using a spirit level.
- Tighten the nuts again once the boiler is levelled.

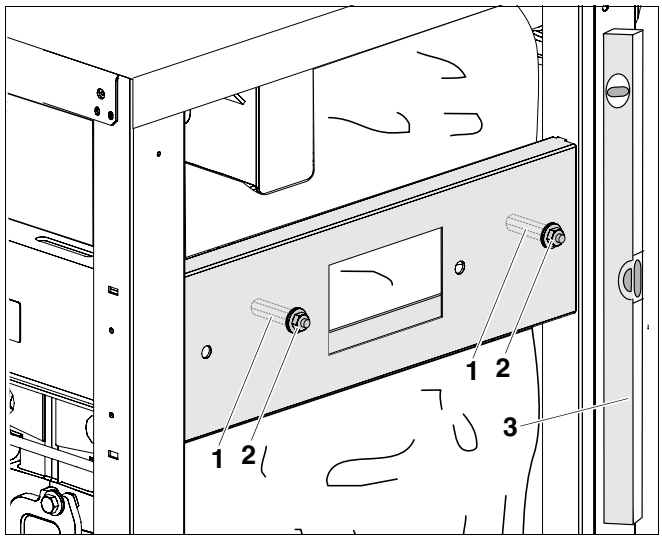

Fig. 26 Levelling the boiler vertically

1 *Screw*
2 *Nut*
3 *Spirit level*

8 Starting up the heating system

This chapter describes commissioning using the basic module control panel.

- Complete the commissioning report during the commissioning procedure
  (➔ Chapter 8.16, page 43)



CAUTION!

BOILER DAMAGE

through excessive dust and airborne seed.

- Do not operate the boiler where heavy dust contamination persists, e. g. through building work inside the boiler room.
- Install an air filter if the air supply is very dusty (e. g. because of unmade roads and paths or dusty working environments, such as quarries, mines etc.) or laden with airborne seed from composite blossom.



CAUTION!

BOILER DAMAGE

through contaminated combustion air.

- Ensure that chlorinated cleaning agents or halogenated hydrocarbons (as, for example, contained in spray cans, solvents or cleaning agents, paints and adhesives) are not used or stored in the boiler room.

- A burner dirtied during building work must be cleaned before being commissioned
  (➔ Chapter 10.6, page 51).

8.1 Recording gas characteristics

Ask your gas supplier for the gas characteristics (Wobbe index and calorific value).

8.2 Checking for leaks

Check the new part of the line for external leaks before commissioning the heating system, and confirm this step in the commissioning report.



CAUTION!

SYSTEM DAMAGE

through short circuits.

- Cover the areas at risk before performing a leak search, e. g. the internal water pressure sensor and the return sensor on the boiler return.
- Never apply leak detector spray to cableways, plugs or electrical leads. Never let any spray drop down onto such areas.

- Check the new pipe section, incl. the seal at the gas train for external leaks. The test pressure at the gas train inlet must be no higher than 150 mbar.

Should you notice a leak during this pressure test, check all connections for leaks using a foaming leak test agent. The agent must be approved for gas leak testing. Ensure that electrical cables/leads never come into contact with leak test agent.

8.3 Purging the gas supply pipe

- Release the plug on the test nipple for gas supply pressure and venting by two turns, and connect the hose.
- Slowly open the mains gas shut-off valve.
- Flare off the escaping gas via a hydraulic seal. Remove the hose when no more air is expelled, and tighten the plug.
- Close the gas shut-off valve.

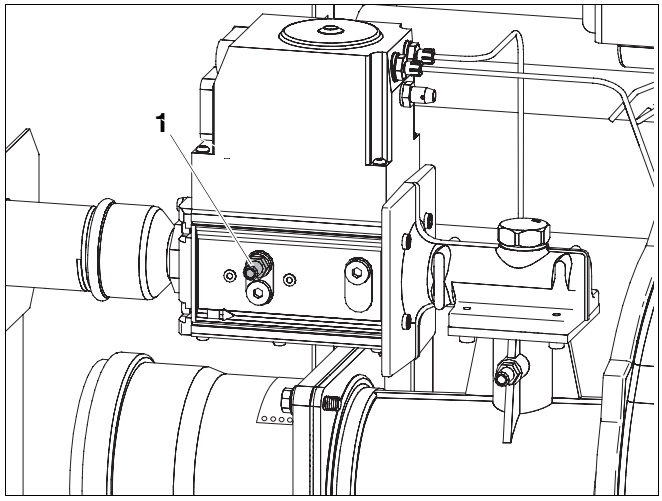

Fig. 27 Purging the gas supply pipe

1 *Test nipple for measuring the gas connection pressure and for venting (in this case GB312-160: Kromschröder CG20)*

8.4 Checking the operating pressure

Check the operating pressure when commissioning.

- Adjust the red pointer of the pressure gauge to the required operating pressure, i. e. at least 1 bar (applicable to sealed heating systems).

CAUTION!

SYSTEM DAMAGE

through boiler scaling.

- For details, please see the operator's log.

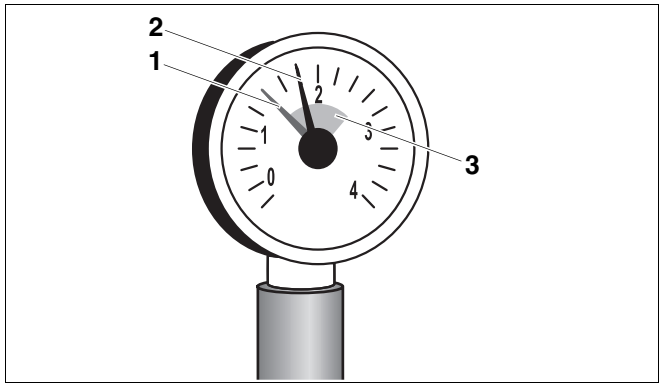

Fig. 28 Pressure gauge for sealed systems

1 *Red needle*

2 *Pressure gauge needle*

3 *Green field*

- Top up the heating water or drain via the boiler fill & drain valve until the required operating pressure has been reached.
- Bleed the heating system during filling.

USER NOTE

The boiler is equipped with a minimum pressure switch (low water indicator). This prevents the boiler from starting up below approx. 0.8 bar.

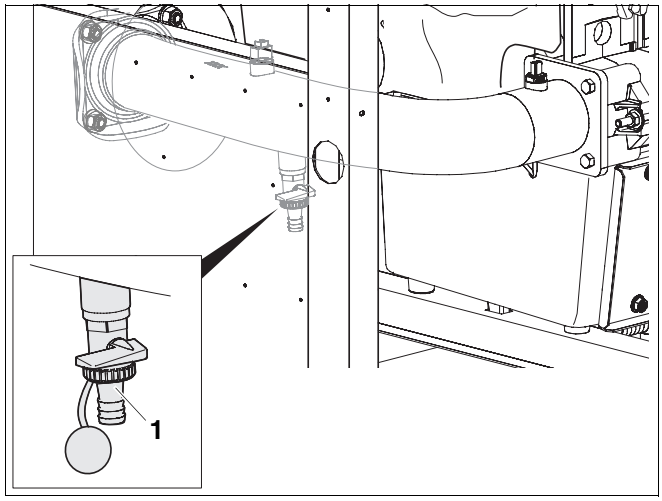

Fig. 29 Topping up heating water/draining via the boiler fill & drain valve

1 *Boiler fill & drain valve*

8.5 Checking the air supply/ventilation apertures and the flue gas connection

- Check whether the ventilation and extract apertures comply with local regulations or those stipulated by your local gas supply company.

WARNING!

RISK TO LIFE

from poisoning.

Insufficient ventilation can lead to dangerous flue gas leaks.

- Never block off or obstruct air ducts and vents or reduce their size.
- The boiler must not be operated until the obstruction has been removed.
- Inform the system user in writing of the fault and associated danger.

- Check that the flue gas connection complies with all current regulations (➔ Chapter 7.1.1, page 17).

USER NOTE

Ensure that any faults are immediately repaired.

8.6 Checking the supply air membrane

- Check that the supply air membrane is present on the air inlet connector and is resting against the pipe.
- Check that the supply air membrane on the air inlet connector can be moved and is not sticking to the pipe.

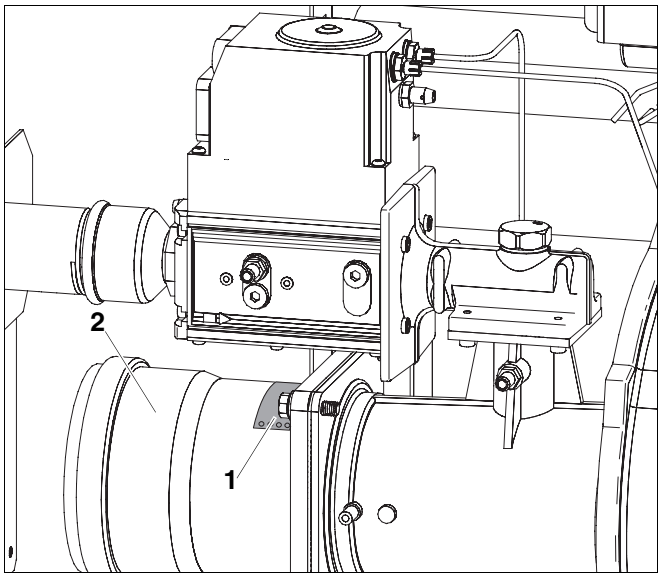

Fig. 30 Checking the supply air membrane

1 *Supply air membrane*

2 *Air inlet connector*

8.7 Checking the system equipment

The burner is factory-set for natural gas H (➔ Tab. 9).

Country	Gas type	Factory settings
AT, BA, BG, BY, CH, CN, CZ, DE, DK, EE, ES, FI, GB, GR, HR, HU, IE, IT, LT, LU, LV, NO, PL, PT, RO, RU, SE, SI, SK, TR, UA	Natural gas H/E (G20)	Factory-set ready for use. The gas train is adjusted and sealed. Wobbe index for 15 °C, 1013 mbar: Adjusted to 14.1 kWh/m^3 Applicable for 11.4 to 15.2 kWh/m^3 Wobbe index for 0 °C, 1013 mbar: Adjusted to 14.9 kWh/m^3 Applicable for 12.0 to 16.1 kWh/m^3
DE, NL	Natural gas L (G25)	After adjustment (➔ Chapter 8.10, page 33) suitable for natural gas L.
HU	Natural gas S (G25.1)	After adjustment (➔ Chapter 8.10, page 33) suitable for natural gas S.
PL	Natural gas L_W (previously GZ 41,5)	After adjustment (➔ Chapter 8.10, page 33) suitable for natural gas L_W.

Tab. 9 Burner factory settings

USER NOTE

If operating with natural gas L, S or L_W, the burner must be adjusted as detailed in ➔ Chapter 8.10, page 33.

8.8 Making the heating system operational

- Open the fuel supply to the main fuel shut-off valve.
- Switch ON the heating system emergency stop switch (if installed) and/or insert the corresponding domestic mains fuse.

8.9 Commissioning the control device and the burner

- Set the rotary selector for maximum boiler temperature and the DHW set value rotary selector to 0.

This ensures that the burner does not start yet (no heat demand).

- Set the ON/OFF switch on the base controller to position "1".

The entire heating system is switched ON. During commissioning, the display briefly shows a flashing "-" before showing fault message "4Y". The fault message "4Y" is displayed because the burner is delivered in a fault state.

- Wait approx. one minute to enable the EMS connection to the RC30 programming unit (accessory) to be established.
- Press the "Reset" button on the BC10. The status display on the BC10 illuminates, and the display shows the current boiler water temperature in °C.

Adjust the date and time on the RC30 programming unit if fault message "A11" appears. Only then will the current boiler water temperature be displayed.

Before continuing with the commissioning steps, adjust the parameters on the RC30 programming unit correctly. In particular the DHW configuration (heating circuit pump and cylinder loading pump) must be adjusted correctly to ensure the heating system works properly. In this connection, carefully read the respective chapters in the installation and service instructions for the RC30 programming unit.

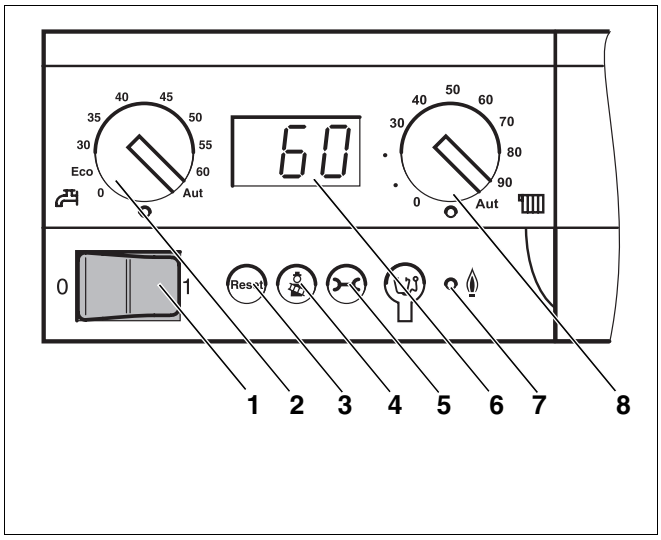

Fig. 31 Logamatic BC10 base controller

1 *ON/OFF switch*
2 *DHW set value rotary selector*
3 *"Reset" button*
4 *"Chimney sweep" button for flue gas test and manual mode*
5 *"Status display" button*
6 *Display*
7 *Burner (ON/OFF) LED*
8 *Rotary selector for maximum boiler temperature during heating mode*

8.10 Set burner to natural gas L, S or L_W

When setting the burner to natural gas L, S or L_W, the following steps must be carried out before commissioning:

- Read off the V screw setting from the gas train.
- Increase the value of the V screw by 0.5, e. g. for a setting of 1.1, set to 1.6.

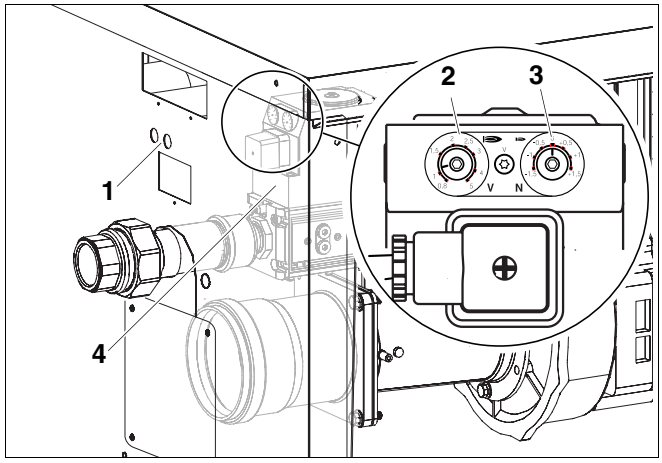

Fig. 32 Adjusting the gas train

1 *Openings for adjusting the gas train*

2 *Adjusting screw V (sealed)*

3 *Adjusting screw N (sealed)*

4 *Gas train*

8.10.1 Switching on the boiler on the BC10

USER NOTE

- Follow the instructions for the BC10 and RC30.

If you are not using an RC30 programming unit for the boiler, you must carry out the following work during commissioning:

- If a Logamatic 4000 control is connected to the boiler, it must be switched off while the RC30 is connected.
- Installing the RC30 programming unit

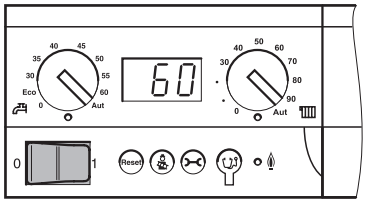

- Set the ON/OFF switch on the base controller to "1" (ON).

This switches on the entire heating system. The base controller status display illuminates and indicates the current boiler water temperature in °C.

8.10.2 Flue gas test

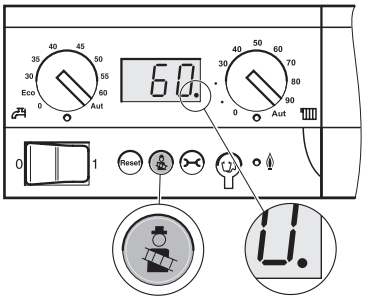

The "Chimney sweep" button is used by your flue gas inspector to carry out flue gas tests.

The central heating control operates for 30 minutes with a higher flow temperature. During the flue gas test, the decimal point illuminates in the status display.



Press the "Chimney sweep" button until the decimal point in the status display **illuminates** (min. 2 seconds).

- Carry out a flue gas test.
- Press the "Chimney sweep" button again to terminate the flue gas test.

8.10.3 Calling up the service level on the RC30



Simultaneously press the "Display", "Heating circuit" and "Back" keys.

SERVICE MENU
LANGUAGE

The main service level menu is displayed, indicated by "SERVICE MENU".



Turn the rotary selector in any direction to scroll through the main menu.

8.10.4 Displaying monitor data on the RC30

Using the "Monitor data" menu you can display the set and actual values for the heating system.

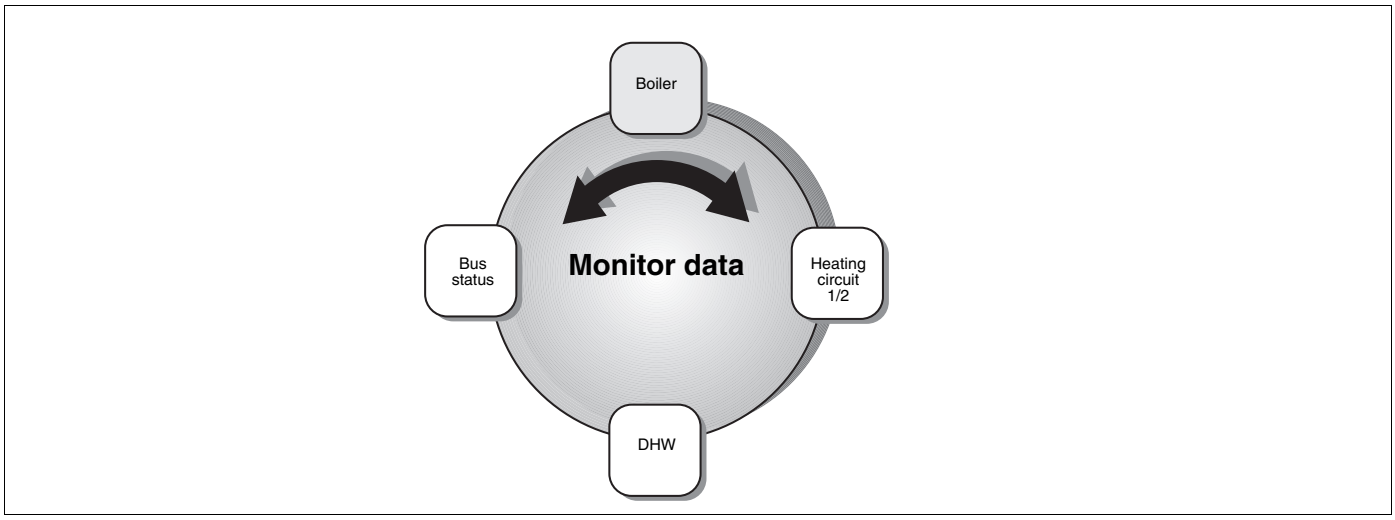

Fig. 33 Overview of "Monitor data"

SERVICE MENU
MONITOR DATA

Call up the service level. Select "SERVICE MENU MONITOR DATA".



Select a monitor data category:
Press the "Display" key.



Turn the rotary selector to the required monitor data (➔ Tab. 10, page 35).

The following data can be found in the individual areas of the RC30 display:

	Display	Actual values (units)	Explanation
Boiler monitor data	SYS	°C	1: Set system value; 2: Actual boiler value (or actual temperature at the low loss header if a WM10 is installed)
	RE/FL	°C	1: Return temperature (actual value); 2: Flow temperature (actual value)
	OUTSIDE	°C	Outside temperature
	ADJ	°C	Adjusted outside temperature
	FGAS	°C	Flue gas temperature
	AIR	°C	Air temperature
→	OUTPUT	%	1: Output (set value) 2: Output (actual value)
	BURNER START	n	Number of burner starts

Tab. 10 Monitor data (the complete table can be found in the "Installation and service instructions for RC30 programming unit")

8.10.5 Adjusting CO_2 at full load

- Read off load from RC30.
- Wait until at least 70 % of the load is reached.
- Check CO_2 - if the value is less than 8.8 % or more than 9.4 %, the setting must be corrected using adjusting screw V.
  Turn the screw clockwise to increase CO_2 - turn it anti-clockwise to decrease CO_2.
- Set CO_2 to 9.1 %.

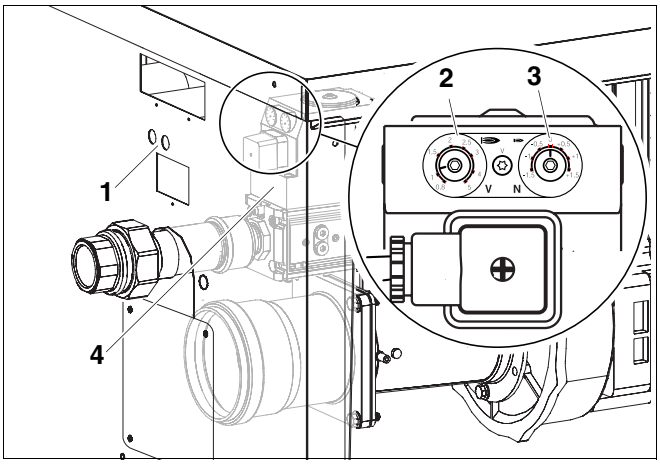

Fig. 34 Adjusting the gas train

1 *Openings for adjusting the gas train*
2 *Adjusting screw V (sealed)*
3 *Adjusting screw N (sealed)*
4 *Gas train*

8.10.6 Checking CO_2 setting at partial load

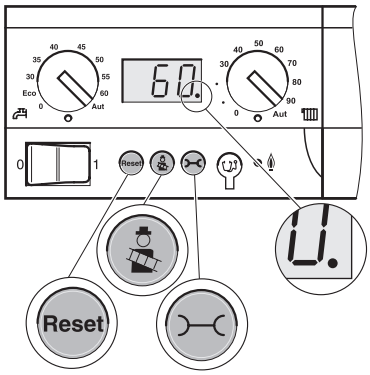

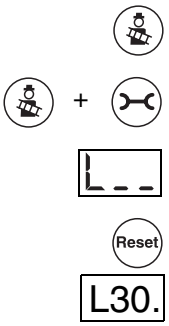

Press the "Chimney sweep" button until the decimal point in the status display **illuminates** (min. 2 seconds). This switches on the flue gas test.

Press "Chimney sweep" and "Status display" simultaneously, and hold for approx. 5 seconds.

In the default factory setting, the display shows "L - -".

Press the reset button to reduce the boiler output

until "L30." appears in the display.

- Set to 30 %.
- Read off load from RC30.
- Wait until 30 % of the load is reached.
- Check CO_2 - if the value is less than 9.0 % or more than 9.6 %, the setting must be corrected using adjusting screw N.
  Turn the screw clockwise to increase CO_2 - turn it anti-clockwise to decrease CO_2.
- Set CO_2 to 9.3 %.

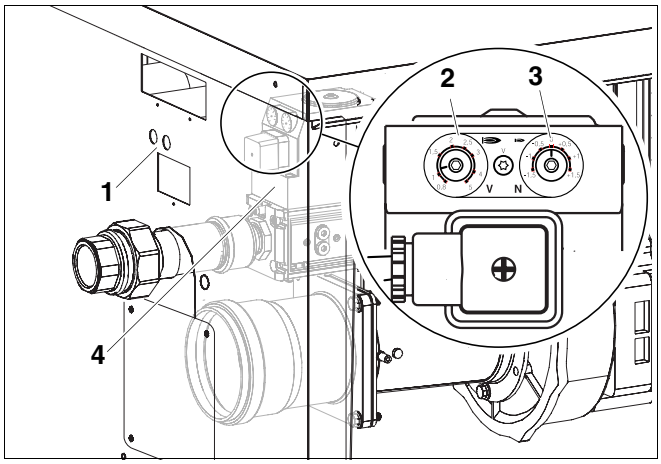

Fig. 35 Adjusting the gas train

1 *Openings for adjusting the gas train*
2 *Adjusting screw V (sealed)*
3 *Adjusting screw N (sealed)*
4 *Gas train*

8.10.7 Checking CO_2 setting at full load

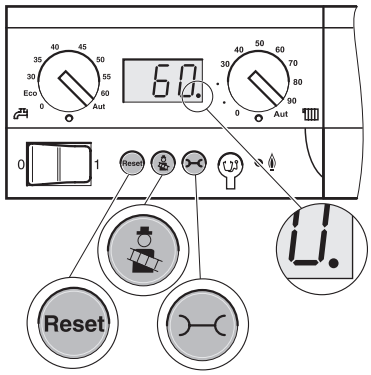



Press the "Chimney sweep" button to increase the boiler output.

- Read off load from RC30.
- Wait until at least 70 % of the load is reached.
- Check CO_2 - if the value is less than 8.8 % or more than 9.4 %, the setting must be corrected using adjusting screw V.
- Affix label for new gas type to the boiler type plate.

8.11 Recording actual values

The boiler connection elbow (accessory)/boiler connector (accessory) on the flue pipe has a test port.

- Carry out the following tests at the flue pipe test port:
  - Draught
  - Gross flue gas temperature t_A
  - Air temperature t_L
  - Net flue gas temperature $t_A - t_L$
  - Carbon dioxide content (CO_2) or oxygen content (O_2)
  - Flue gas loss q_A
  - Carbon monoxide content

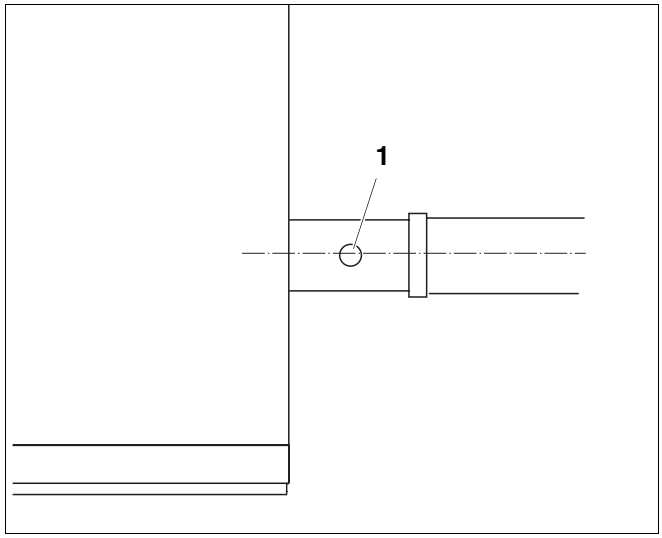

Fig. 36 Recording actual values

1 *Flue pipe test port*

8.11.1 Change status display on BC10 to the boiler temperature display status



Press the "Status display" button to change to the next status display.

P1.2

Current system pressure
(depending on boiler type, only if it has a pressure sensor)



Press the "Status display" button to change to the next status display.

0 y

Operating status (display code)



Press the "Status display" button to change to the next status display.

60

The boiler temperature is displayed once more.

8.11.2 Returning to operating mode from the flue gas test



- Press the "Chimney sweep" button again to terminate the flue gas test.

- Return to operating mode on the RC30.
- Close flap on the RC30.

8.11.3 Draught

The back pressure in the flue gas system must not exceed 100 Pa (1.0 mbar).



WARNING!

RISK TO LIFE

through toxic flue gases.

- Only operate these boilers with a chimney or flue gas system (➔ Tab. 2, page 8).

8.11.4 Carbon monoxide content

CO values in the airless state must be below 400 ppm or 0.04 % vol.

Values above 100 ppm indicate incorrect burner adjustment, incorrect device setup, burner and/or heat exchanger contamination or burner faults.
In such cases, identify and remedy the cause of the problem.

8.12 Function checks

During commissioning and the annual inspection, check all regulating, control and safety equipment for correct function and correct adjustment, where applicable.

8.12.1 Checking the ionisation current

Calling up the service level on the RC30



Simultaneously press the "Display", "Heating circuit" and "Back" keys.

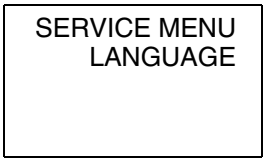

The main service level menu is displayed, indicated by "SERVICE MENU".



Turn the rotary selector in any direction to scroll through the main menu.

Displaying monitor data on the RC30

Using the "Monitor data" menu you can display the set and actual values for the heating system.

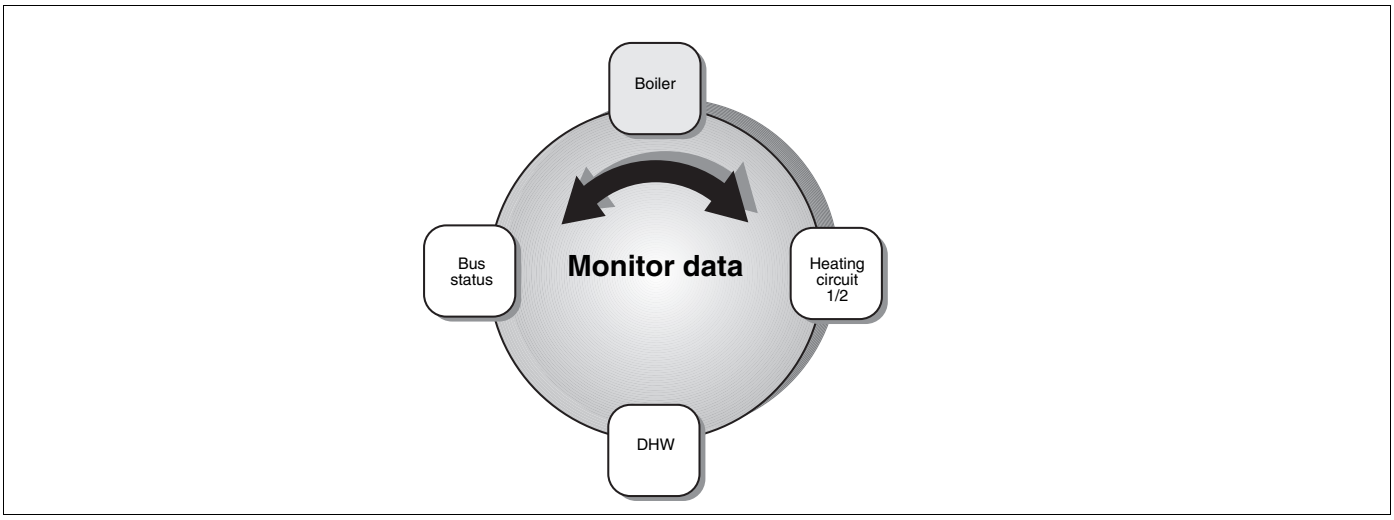

Fig. 37 Overview of "Monitor data"

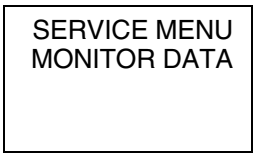

Call up the service level. Select "SERVICE MENU MONITOR DATA".



Select a monitor data category:
Press the "Display" key.



Turn the rotary selector to the required monitor data (➔ Tab. 11, page 40).

The following data can be found in the individual categories:

	Display	Actual values (units)	Explanation
Boiler monitor data	SYS	°C	1: Set system value; 2: Actual boiler value (or actual temperature at the low loss header if a WM10 is installed)
	RE/FL	°C	1: Return temperature (actual value); 2: Flow temperature (actual value)
	OUTSIDE	°C	Outside temperature
	ADJ	°C	Adjusted outside temperature
	FGAS	°C	Flue gas temperature
	AIR	°C	Air temperature
	OUTPUT	%	1: Output (set value) 2: Output (actual value)
	BURNER START	n	Number of burner starts
	OP TIME	hh:mm	Operating time in hours and minutes
	PUMP	OFF, 1 – 100 %, ON/OFF	Boiler pump (number = speed in percent or switching state for single-stage pumps)
	WATER PRESS	BAR	System pressure (KIM-dependent)
	VALVE 1	CLOSED/OPEN	Burner valve stage 1
	VALVE 2	CLOSED/OPEN	Burner valve stage 2
→	FLAME CURR	µA	Flame monitoring
	IGNITION	ON/OFF	Ignition
	FLAME	ON/OFF	Flame

Tab. 11 Monitor data (the complete table can be found in the "Installation and service instructions for RC30 programming unit")

- Read off ionisation current and compare with the specified values.
- Return to operating mode on the RC30.
- Close flap on the RC30.

On boilers with no RC30 programming unit

USER NOTE

- Follow the instructions for the BC10 and RC30.

If you are not using an RC30 programming unit for the boiler, please note the following when completing the commissioning process:

- Remove the RC30 programming unit.
- If a Logamatic 4000 control is connected to the boiler, it can be switched on after the RC30 programming unit has been removed.

8.13 Checking the gas connection pressure

- Undo the plug on the test nipple for gas connection pressure and venting by two turns.
- Push the test hose of the U-tube pressure gauge onto the test nipple.
- Check the gas supply pressure when the burner operates. Record the value in the commissioning report.

– Contact your local gas supplier if insufficient gas supply pressure is entering your system.

– Install a secondary gas pressure regulator upstream of the gas train, if the gas supply pressure is too high.

- Pull the test hose off again.

– Carefully tighten the plug on the test port for gas connection pressure and venting.

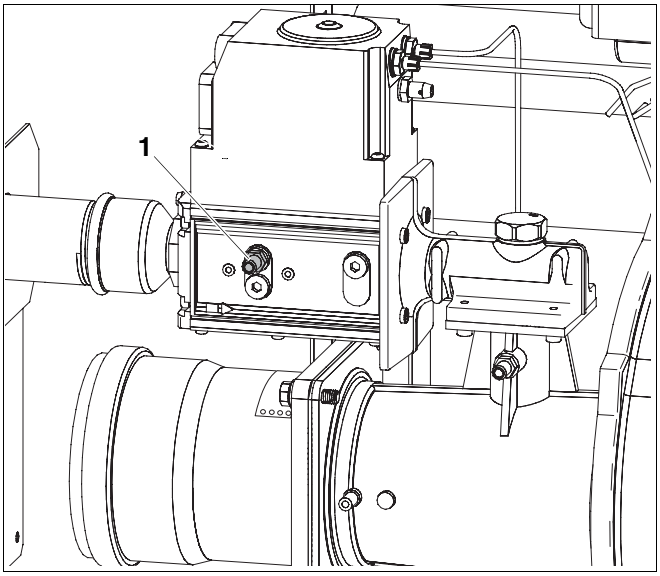

Fig. 38 Checking the gas connection pressure

1 *Test nipple for measuring the gas connection pressure and for venting (in this case GB312-160: Kromschröder CG20)*

Country	Gas type	Supply pressure *		
		Min.	Rated	Max.
		mbar	mbar	mbar
AT, BA, BG, BY, CH, CN, CZ, DE, DK, EE, ES, FI, GB, GR, HR, IE, IT, LT, LU, LV, NO, PL, PT, RO, RU, SE, SI, SK, TR, UA	Natural gas H/E (G20) Natural gas L (G25) Natural gas L_W (previously GZ41,5)	17	20	25
NL	Natural gas L (G25)	20	25	30
HU	Natural gas H (G20) Natural gas S (G25.1)	20	25	33

Tab. 12 Gas types and connection pressures

** The gas supplier must guarantee the min. and max. pressures (acc. to national regulations for public gas supply)*

8.14 Checking for leaks during operation

- Test all sealing points on the entire burner gas route with a foaming leak detector agent, whilst the burner operates, e. g.:

– test nipple,
– nozzles,
– plugs, etc.

The agent must be approved for gas leak testing.

CAUTION!

SYSTEM DAMAGE

through short circuits.

- Cover the areas at risk before performing a leak search, e. g. the internal water pressure sensor and the return sensor on the boiler return.
- Never apply leak detector spray to cableways, plugs or electrical leads. Never let any spray drop down onto such areas.

8.15 Installing casing parts

USER NOTE

If the side panels/boiler front panel will not fit properly, level the boiler vertically (➔ Chapter 7.6, page 27).

- Hook the bottom of the side panels in place first, then raise slightly and hook in at the top.
- Using locking screws, secure the side panels at the front and back of the boiler.
- Hook the bottom of the front panel in place first, then raise slightly and hook in at the top.
- Secure the top of the front panel to the boiler using the locking screw.
- Secure the clear wallet containing the technical documentation in a visible position on the boiler side panel.

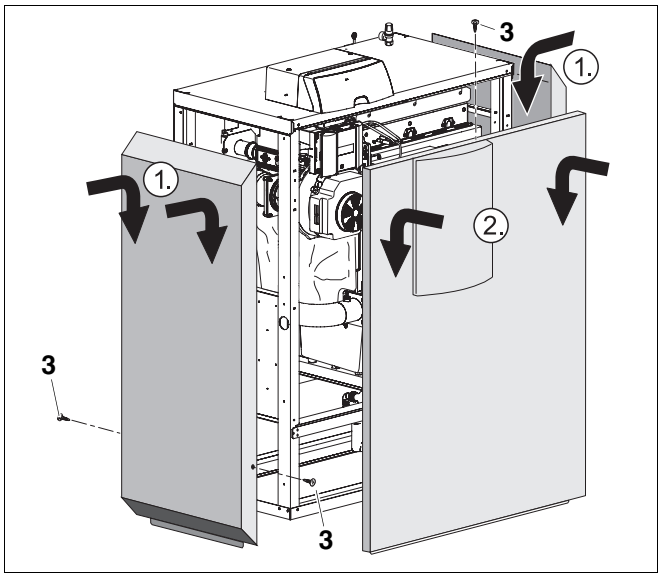

Fig. 39 Installing casing parts

1 *Side panel*
2 *Front panel*
3 *Locking screw*

8.16 Commissioning report

- Sign off all commissioning work as completed and enter the relevant date.

	Commissioning steps	Page	Actual values		Comments
1.	Fill heating system and check all connections for leaks	24			
2.	Note gas characteristics: Wobbe index Calorific value	28	_____ kWh/m^3 _____ kWh/m^3		
3.	Check the gas pipe for leaks; Purge the gas supply pipe	28 29	☐		
4.	Create operating pressure	29			
5.	Check the air supply/ventilation and flue pipe connections	30	☐		
6.	Check the supply air membrane	30	☐		
7.	Check the system equipment	31	☐		
8.	Commission the control device and the burner	32	☐		
9.	Adjust gas type if required	33			
10.	Record actual values: Draught Gross flue gas temperature t_A Air temperature t_L Net flue gas temperature $t_A - t_L$ Carbon dioxide content (CO_2) or oxygen content (O_2) Flue gas losses q_A Carbon monoxide content (CO), airless	37	Full load _____ Pa _____ °C _____ °C _____ °C _____ % _____ % _____ ppm	Partial load _____ Pa _____ °C _____ °C _____ °C _____ % _____ % _____ ppm	
11.	Check the gas supply pressure (flow pressure)	41	_____ mbar		
12.	Check for leaks during operation	42	☐		
13.	Function checks: Check the ionisation current	39	_____ µA		
14.	Install casing parts	42	☐		
15.	Provide the system user with information and hand over all relevant technical documentation	–	☐		
	Confirm correct commissioning Company stamp/signature/date				

USER NOTE

- Inform your customer of the correct fuel type and enter it into the table (➔ boiler operating instructions, page 2).

9 Shutting down the heating system

9.1 Standard shutdown

- Switch the ON/OFF switch on the control device OFF (position "0"). This switches the boiler and all its components OFF (for example the burner).
- Close the main fuel shut-off valve.



CAUTION!

SYSTEM DAMAGE

through frost.

The heating system can freeze up in cold weather if it has been switched off.

- Leave the heating system switched ON as long as possible.
- Protect your heating system against freezing by draining the heating system and DHW pipework at the lowest possible point.

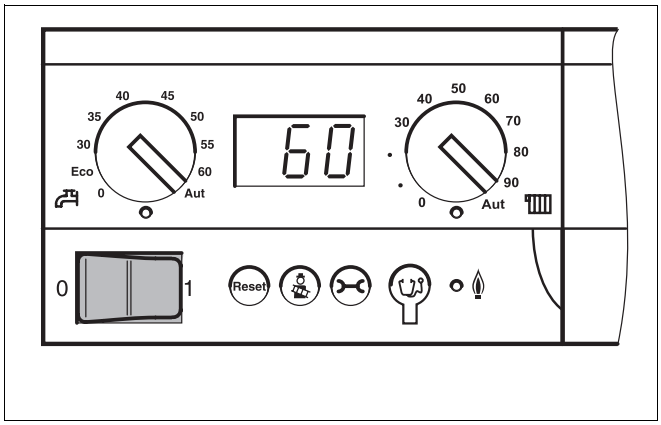

Fig. 40 Switching off the heating system

9.2 Emergency measures

Explain to your customer the measures required in emergencies, for example during fire i. e.:

- Close the main fuel shut-off valve.
- Isolate the heating system from the mains power supply using the heating system emergency stop switch or the corresponding domestic fuse.

10 Boiler inspection and maintenance

10.1 Why is regular maintenance important?

Heating systems should be regularly maintained for the following reasons:

– to achieve a high level of efficiency and to operate the system economically (low fuel consumption),
– to achieve a high level of operational reliability,
– to maintain the cleanest possible combustion.

Offer an annual inspection and as-required maintenance contract to your customer. You can check in the inspection and maintenance reports what should be included in such contracts
(➔ Chapter 10.10, page 61).

USER NOTE

You may order spare parts from the spare parts catalogue.

WARNING!

RISK TO LIFE

from electric shock.

- Before you open the control device: Isolate all poles of the mains power supply and secure against unauthorised re-connection.

- Unscrew the locking screw from the top centre of the boiler front panel.
- Slightly lift the front panel and remove by pulling towards you.

WARNING!

RISK TO LIFE

through the explosion of volatile gases.

- Work on gas components must only be carried out by qualified and authorised personnel.

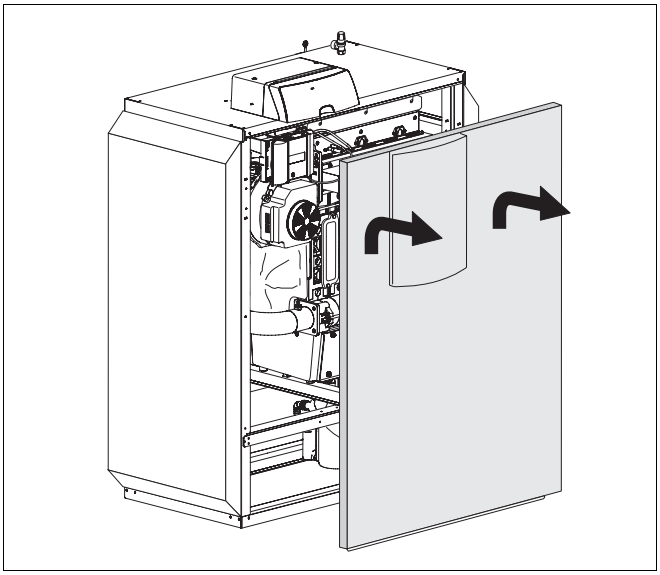

Fig. 41 Removing the front panel

10.2 General work

The following work is not described in any further detail in this document. Nevertheless, such work is necessary:

- Checking the general condition of the heating system.
- Visual and function check of the heating system.
- Checking the combustion air and flue gas routing for function and safety.
- Checking all gas and water pipes for signs of corrosion.
- Replacing any corroded pipes.
- Checking the inlet pressure of the membrane expansion vessel.

10.3 Internal leak test

This section explains how to check for internal leaks and what you must look out for.

10.3.1 Determining the test volume

$V_{test} = V_{tot.} = V_{pipe} + V_{gas\ train}$

- Determine length of pipe to main fuel shut-off valve.
- Determine gas train volume ($V_{gas\ train}$) using (➔ Tab. 13).
- Determine pipe volume (V_{pipe}) using (➔ Tab. 14 and Tab. 15).
- Calculate test volume (V_{test}) according to above equation.

Gas train volume (approximate values)	
Gas train volumes up to 50 kW	0.1 litre
Gas train volumes > 50 kW	0.2 litre

Tab. 13 Gas train volume ($V_{gas\ train}$)

Pipe length	Pipe volume (V_{pipe}) in litres					
	Pipe length diameter in inches					
in m	1/2	3/4	1	1 1/4	1 1/2	2
1	0.2	0.4	0.6	1.0	1.4	2.2
2	0.4	0.7	1.2	2.0	2.7	4.4
3	0.6	1.1	1.7	3.0	4.1	6.6
4	0.8	1.5	2.3	4.0	5.5	8.8
5	1	1.8	2.9	5.1	6.9	-
6	1.2	2.2	3.5	6.1	8.2	-
7	1.4	2.5	4.1	7.1	9.6	-
8	1.6	2.9	4.6	8.1	-	-
9	1.8	3.3	5.2	9.1	-	-
10	2	3.6	5.8	10.1	-	-

Tab. 14 Pipe volumes (V_{pipe}) subject to pipe length and diameter

Pipe length	Pipe volume (V_{pipe}) in litres					
	Pipe diameter in mm (copper pipe)					
in m	15 x 1	18 x 1	22 x 1	28 x 1.5	35 x 1.5	45 x 1.5
1	0.1	0.2	0.3	0.5	0.8	1.4
2	0.3	0.4	0.6	1.0	1.6	2.8
3	0.4	0.6	0.9	1.5	2.4	4.2
4	0.5	0.8	1.3	2.0	3.2	5.5
5	0.7	1.0	1.6	2.5	4.0	6.9
6	0.8	1.2	1.9	2.9	4.8	8.3
7	0.9	1.4	2.2	3.4	5.6	9.7
8	1.1	1.6	2.5	3.9	6.4	-
9	1.2	1.8	2.8	4.4	7.2	-
10	1.3	2.0	3.1	4.9	8.0	-

Tab. 15 Pipe volumes (V_{pipe}) subject to pipe length and diameter

10.3.2 Leak test

- Close the main fuel shut-off valve.
- Undo the test port screw plug two turns.
- Push the test hose of the U-tube pressure gauge onto the test nipple.
- Open main fuel shut-off valve, read off pressure and note it down.
- Close main fuel shut-off valve and read off the pressure again after one minute. Calculate the pressure drop per minute.

Using this figure (pressure drop per minute) and the test volume (V_{test}), read off using the following diagram (➔ Fig. 43) whether the gas train can still be used.

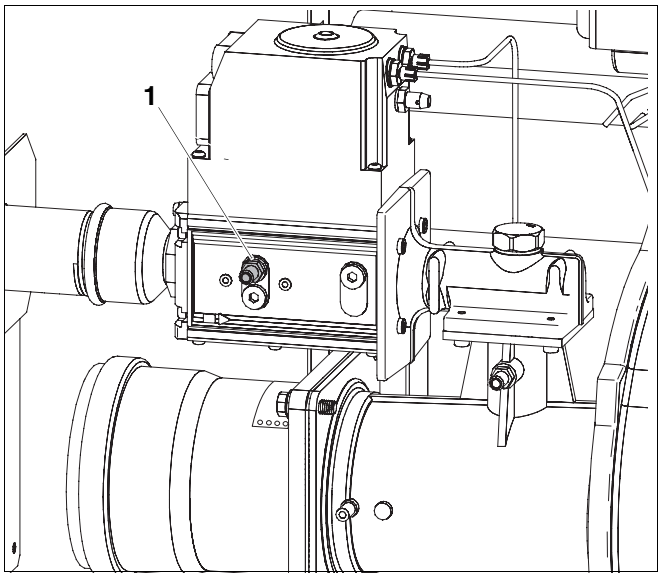

Fig. 42 Internal leak test

1 *Test nipple for measuring the gas connection pressure and for venting (in this case GB312-160: Kromschröder CG20)*

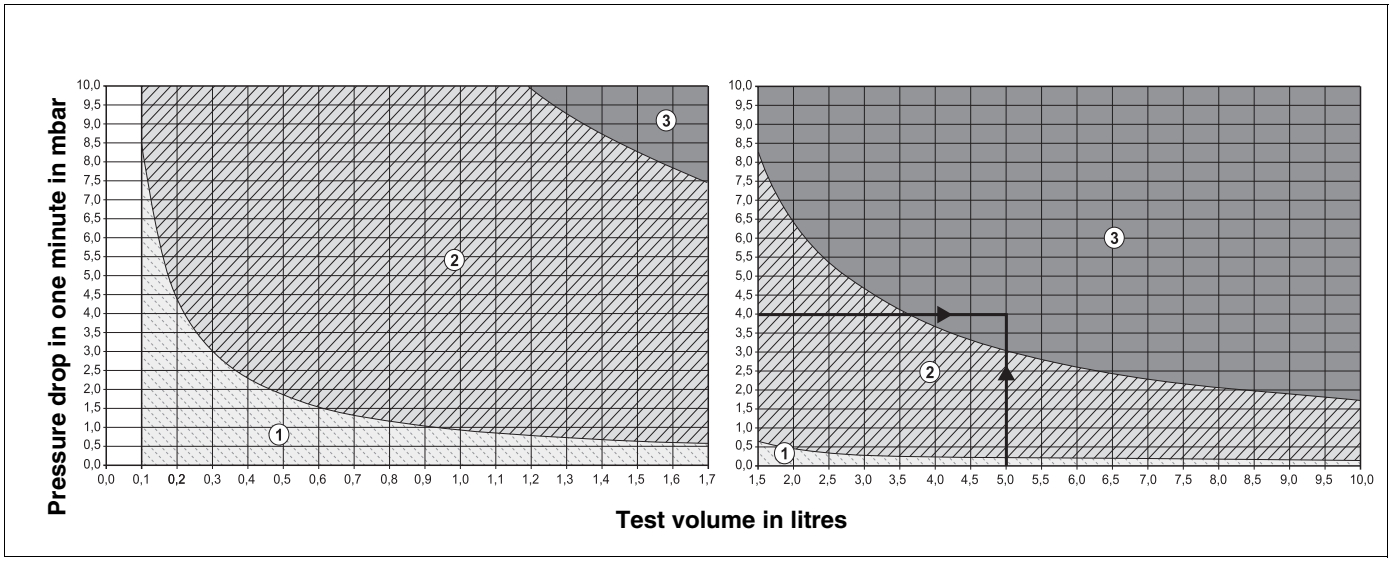

Fig. 43 Permitted pressure drop per minute for the internal leak test with gas pressure present (for 0.1 l – 10.0 l test volume (V_{test}))

Range 1 "Train leak proof" = applies to new installations

Range 2 "Train sufficiently leak-proof" = train can be used without restriction

Range 3 "Train leaking" = train cannot be used >> Carry out test as described below

Read-off example: *test volume (V_{test}) 5 litres and pressure drop 4 mbar/min = range 3 "Train leaking" = train cannot be used >> Carry out test as described below*

USER NOTE

If you detect a steep pressure drop of > 10 mbar/minute at a test volume (V_{test}) of < 1 litre, you must increase the test volume (V_{test}). To this end, include the pipe to the next shut-off valve in the leak test and repeat test using new test volume (V_{test}).

If the read-off point for test volume (V_{test}) and pressure drop per minute lies within the range "train leaking" (cf. read-off example in Fig. 43, page 48), you must carry out the test described below.

- Open the main fuel shut-off valve.



CAUTION!

SYSTEM DAMAGE

through short circuits.

- Cover areas at risk before searching for leaks.
- Never apply leak detector spray to cableways, plugs or electrical leads. Never let any spray drop down onto such areas.

- Check all seals in the tested section of pipe using a foaming leak detector spray.
- Seal leaks as required and perform test again.
- If no leaks were found, replace gas train.

Completing the leak test

- Remove hose.
- After completing the measuring work, retighten the screw in the test nipple.
- Check the test nipple for leaks.

10.4 Checking the heating system operating pressure

On sealed systems the pressure gauge marker must be within the green field.

Ensure that the red pressure gauge needle is set to the required operating pressure.

USER NOTE

- Set the op (overpressure) to at least 1 bar.

- Check the heating system operating pressure.

The operating pressure is too low if the pressure gauge needle indicates below the green field. In this case, top up with water.

CAUTION!

SYSTEM DAMAGE

through frequent topping up.

The heating system may be damaged, depending on water quality, by corrosion or scaling if you frequently need to top up the water (see also operator's log).

- Ensure that your heating system is bled properly.
- Check the heating system for leaks and proper operation of the expansion vessel.

- Top up with water via the boiler fill & drain valve.
- Vent the heating system.
- Recheck the operating pressure.

USER NOTE

You can also read off the system pressure from the control panel
(e. g. "P1.4" corresponds to 1.4 bar).

- Fit the boiler front panel (➔ Chapter 8.15, page 42)

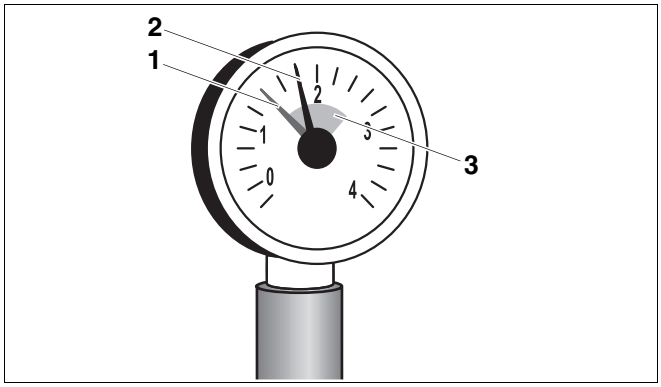

Fig. 44 Pressure gauge for sealed systems

1 *Red needle*
2 *Pressure gauge needle*
3 *Green field*

10.5 Measuring the carbon dioxide content

Measure the CO_2 content.

- Insert the test probe into the core flow through the test port in the flue pipe.
- Record the flue gas values.

If the CO_2 content differs from the set value (➔ Tab. 2, page 8) by 0.5 %, you must adjust the burner as described in ➔ Chapter 8.10.1, page 33.

10.6 Determining the extent of contamination on the burner and heat exchanger and cleaning

The boiler can be cleaned with a dry or wet method.

A long or a short cleaning blade is available as an accessory for dry cleaning. Cleaning equipment is available as an accessory for wet cleaning.

Prior to cleaning the burner or heat exchanger, check or implement the following:

10.6.1 Determining the extent of contamination

Connect the differential pressure measuring device between the test nipple on the burner and the boiler connection elbow/connector at boiler end (➔ Fig. 45).

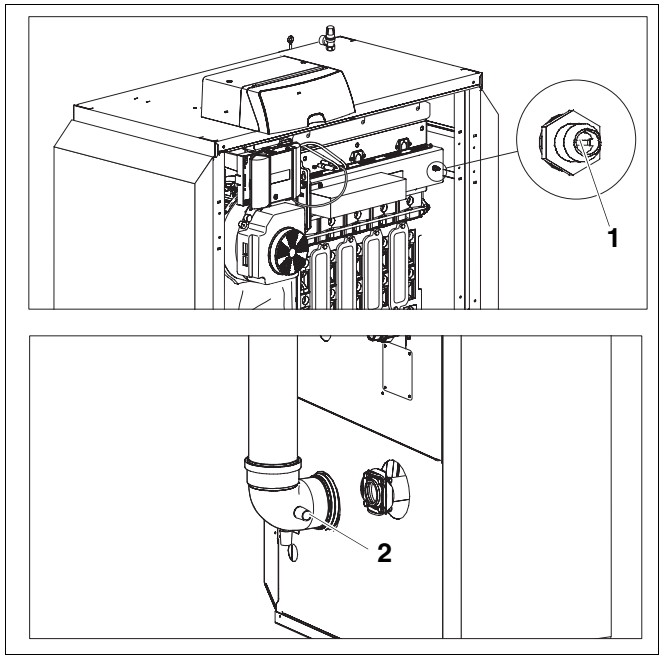

Fig. 45 Determining the extent of contamination

1 *Test nipple on the burner*

2 *Test port on the boiler connection to the flue gas system*

Switching on the boiler at BC10

USER NOTE

- Follow the instructions for the BC10 and RC30.

If you are not using an RC30 programming unit for the boiler, you must carry out the following work during inspection and maintenance:

- If a Logamatic 4000 control is connected to the boiler, it must be switched off while the RC30 is connected.
- Install the RC30 programming unit.

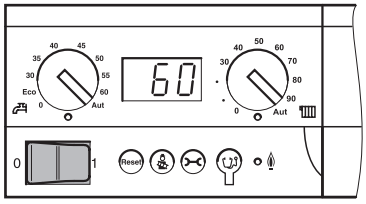

- Set the ON/OFF switch on the base controller to "1" (ON).

This switches on the entire heating system. The base controller status display illuminates and indicates the current boiler water temperature in °C.

Flue gas test

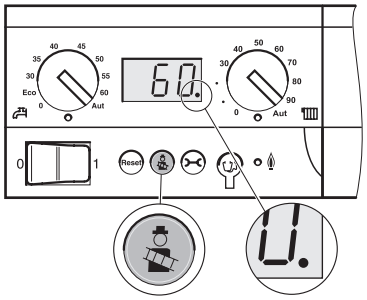

The "Chimney sweep" button is used by your flue gas inspector to carry out flue gas tests.

The central heating control operates for 30 minutes with a higher flow temperature. During the flue gas test, the decimal point illuminates in the status display.

Press the "Chimney sweep" button until the decimal point in the status display **illuminates** (min. 2 seconds).

- Carry out a flue gas test.
- Press the "Chimney sweep" button again to terminate the flue gas test.

Calling up the service level on the RC30



Simultaneously press the "Display", "Heating circuit" and "Back" keys.

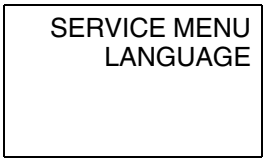

The main service level menu is displayed, indicated by "SERVICE MENU".



Turn the rotary selector in any direction to scroll through the main menu.

Displaying monitor data on the RC30

Using the "Monitor data" menu you can display the set and actual values for the heating system.

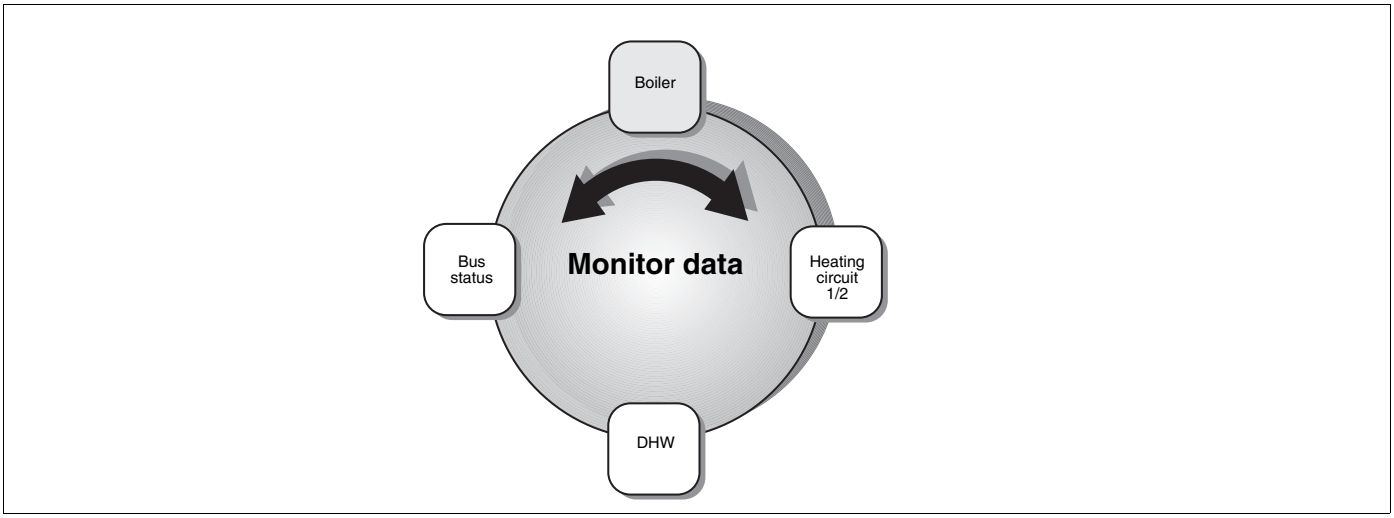

Fig. 46 Overview of "Monitor data"

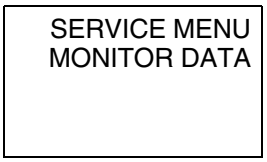

Call up the service level. Select "SERVICE MENU MONITOR DATA".

Select a monitor data category:



Press the "Display" key.



Turn the rotary selector to the required monitor data (➔ Tab. 16, page 54).

The following data can be found in the individual areas of the RC30 display:

	Display	Actual values (units)	Explanation
Boiler monitor data	SYS	°C	1: Set system value; 2: Actual boiler value (or actual temperature at the low loss header if a WM10 is installed)
	RE/FL	°C	1: Return temperature (actual value); 2: Flow temperature (actual value)
	OUTSIDE	°C	Outside temperature
	ADJ	°C	Adjusted outside temperature
	FGAS	°C	Flue gas temperature
	AIR	°C	Air temperature
→	OUTPUT	%	1: Output (set value); 2: Output (actual value)
	BURNER START	n	Number of burner starts

Tab. 16 Monitor data (the complete table can be found in the "Installation and service instructions for RC30 programming unit")

- Read off load from RC30.
- Wait until 100 % of the load is reached.
- Read off differential pressure from the meter and compare with the value shown in ➔ Tab. 17.
- If the pressure measured is higher than the value in the table, the heat exchanger must be cleaned using either the dry or wet method.

Boiler rating					
90 kW	**120 kW**	**160 kW**	**200 kW**	**240 kW**	**280 kW**
360	460	550	530	540	560

Tab. 17 Cleaning threshold – differential pressure in Pa

10.6.2 Cleaning the burner and heat exchanger

- Shut down the heating system (➔ Chapter 9, page 44).
- Close the main gas shut-off valve and secure against unauthorised re-opening.
- Allow the boiler to cool down.
- Detach siphon from the outlet on the condensate tray.
- Place a bucket under the condensate tray outlet.

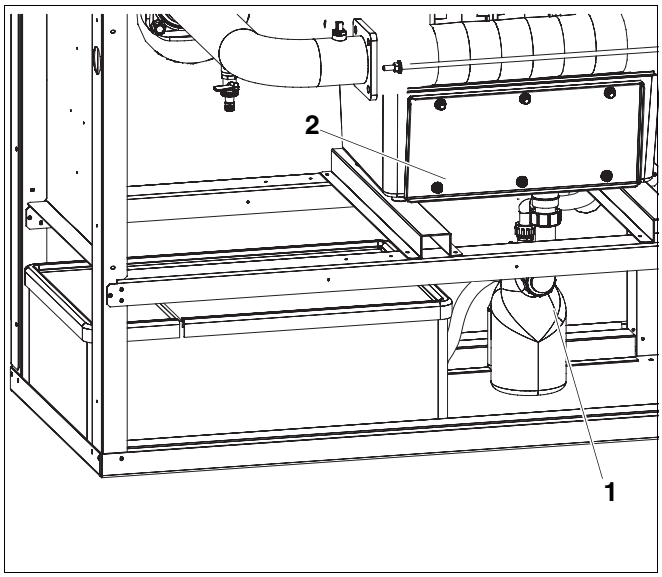

Fig. 47 Removing the siphon

1 *Siphon*
2 *Condensate tray*

Removing the burner

- Disconnect all electrical connections on the burner.

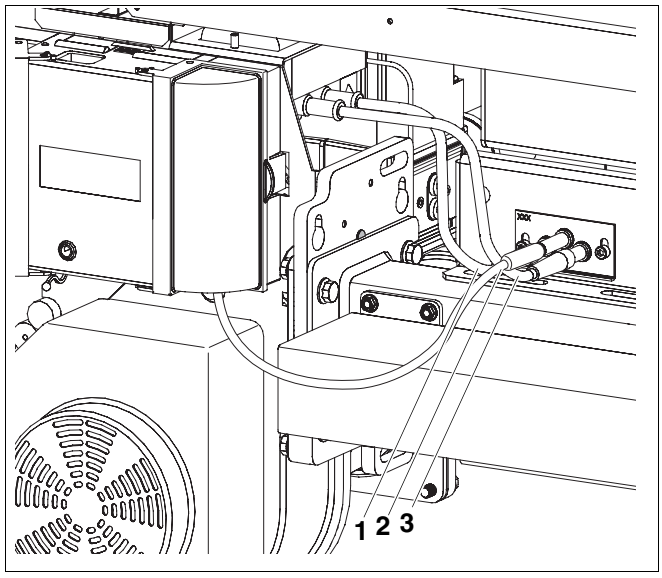

Fig. 48 Disconnect electrical connections on the burner

1 *Ignition lead*
2 *Monitoring lead*
3 *Ignition lead*

- Unscrew the fixing nuts from the top and bottom of the burner shield.
- Bolts on the side of the blower:
  Loosen the two rear hexagon bolts two turns;
  Remove the two front hexagon bolts.
- Carefully pull out the burner towards you.

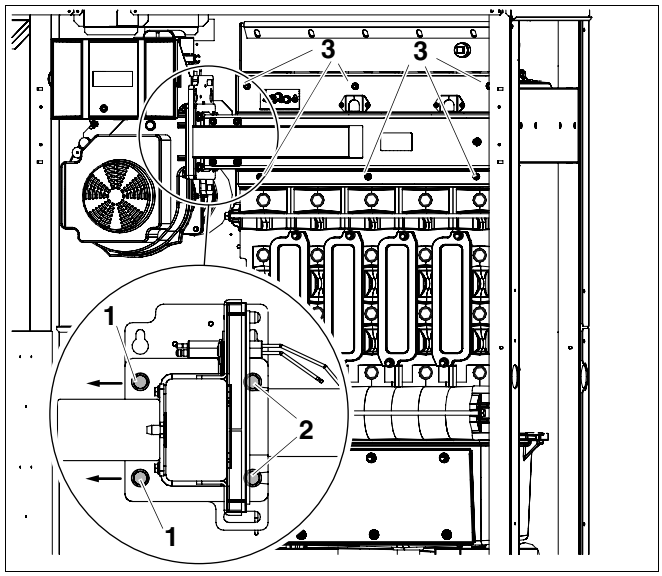

Fig. 49 Removing the burner from the heat exchanger

1 *Front hexagon bolt*
2 *Rear hexagon bolt*
3 *Fixing nuts*

- Remove fixing nuts from the clean-out covers at the top and bottom of the boiler block.
- Remove clean-out covers.
- Unscrew the fixing nuts from the top and bottom of the condensate tray cover.
- Remove cover.

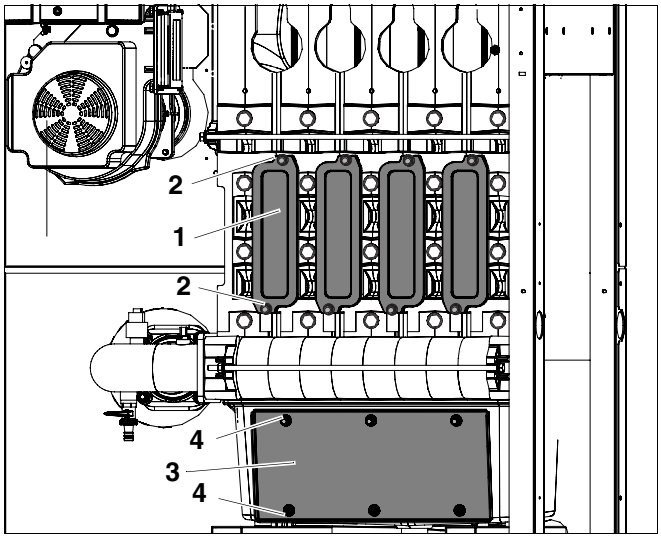

Fig. 50 Opening the clean-out cover

1 *Clean-out cover on the boiler block*
2 *Fixing nuts on the clean-out cover*
3 *Condensate tray cover*
4 *Fixing nuts on the condensate tray cover*

Cleaning the heat exchanger using the dry method

CAUTION!

RISK OF INJURY

from sharp edges on the cleaning blades.

- To avoid injury, wear gloves when cleaning the boiler using cleaning blades (accessory).

- Clean the heat exchanger gas flues horizontally and diagonally, using the long cleaning blade.
- Insert the short cleaning blade into the condensate tray and clean the back of the gas flues from below.

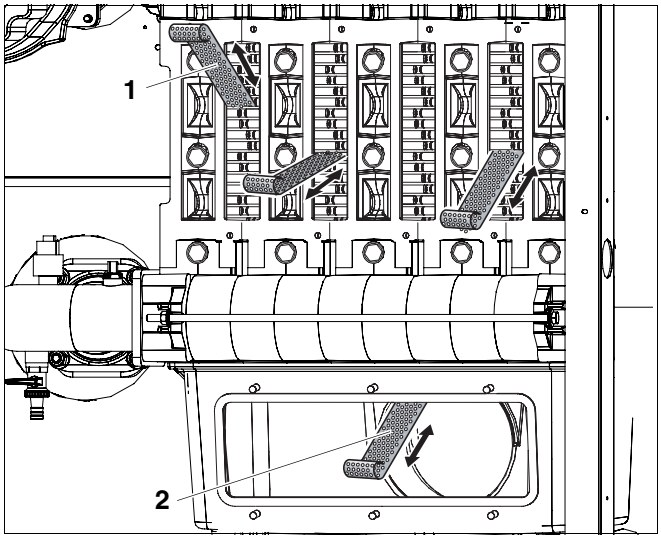

Fig. 51 Cleaning the heat exchanger using the dry method

1 *Long cleaning blade (accessory)*
2 *Short cleaning blade (accessory)*

Cleaning the heat exchanger using the wet method

When wet-cleaning, use a cleaning agent appropriate to the level of contamination (soot level and encrusted residues). The cleaning agent must be suitable for aluminium.

WARNING!

RISK TO LIFE

through escaping gases.

- When fitting the clean-out cover, look out for faulty gaskets and ensure the cover is seated correctly.

- Screw clean-out cover back on again.
- Clean the heat exchanger with water or approved cleaning agents (see instructions provided by the manufacturer of the cleaning agent).

USER NOTE

- Protect electrical components against moisture.

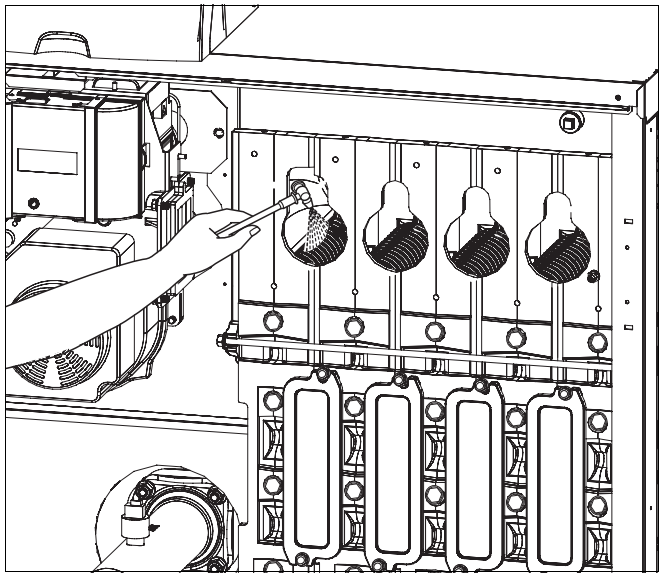

Fig. 52 Cleaning the heat exchanger using the wet method

Working on the heat exchanger during wet or dry cleaning

- Flush any residues with a hose into the bucket.
- Clean the siphon with water.

WARNING!

RISK TO LIFE

from poisoning.

Siphons that are not filled with water can pose a risk to life through escaping flue gas.

- Fill the siphon with approx. two litres of water.

- Refit the siphon.

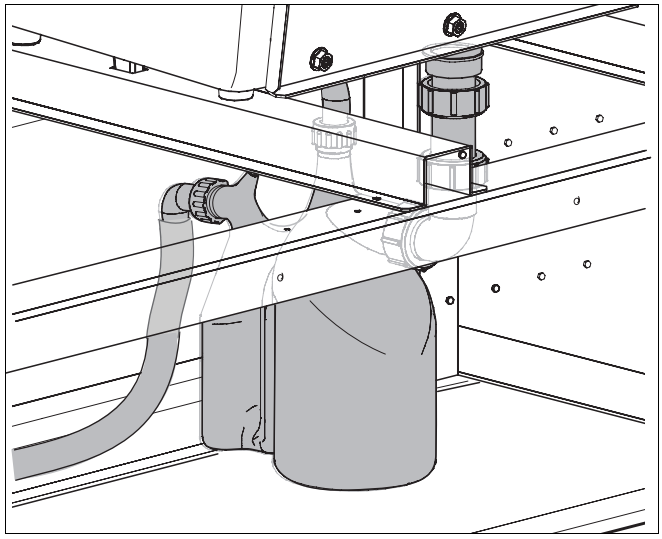

Fig. 53 Cleaning the siphon

Cleaning the burner

- Blow off the burner rods and distributor bar from inside and outside using compressed air.

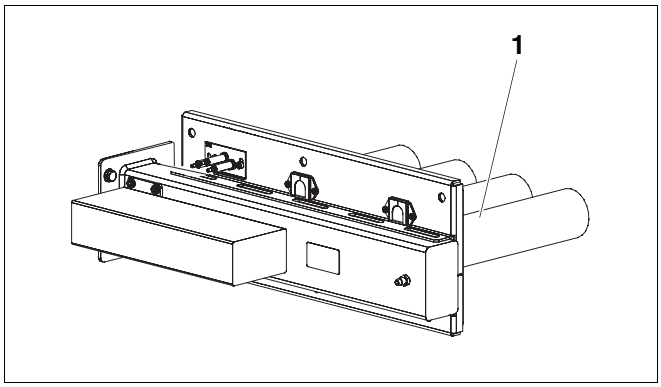

Fig. 54 Cleaning the burner

1 *Burner rods*

Inspecting the electrodes

Checking and adjusting electrode position

- Measure the distances between the electrodes as shown in ➔ Fig. 56 and adjust accordingly.

PLEASE NOTE:

Check that the burner rod surface near the electrodes is in perfect condition (no ends sticking out).

If ends from the burner rod come into contact with the electrodes, a fault shutdown may result.

- Loosen the screws on the electrode holder.
- Adjust the electrode holder so that the position of the electrodes matches that shown in ➔ Fig. 56.
- Tighten the screws on the electrode holder.

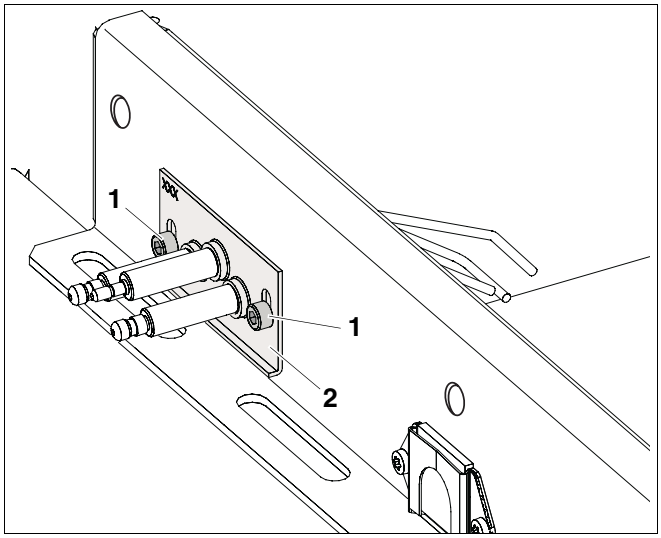

Fig. 55 Adjusting the electrode holder

1 *Screw*

2 *Electrode holder*

Burn-up

- Inspect the extent of electrode burn-up, i. e. the distance between the ignition electrodes.

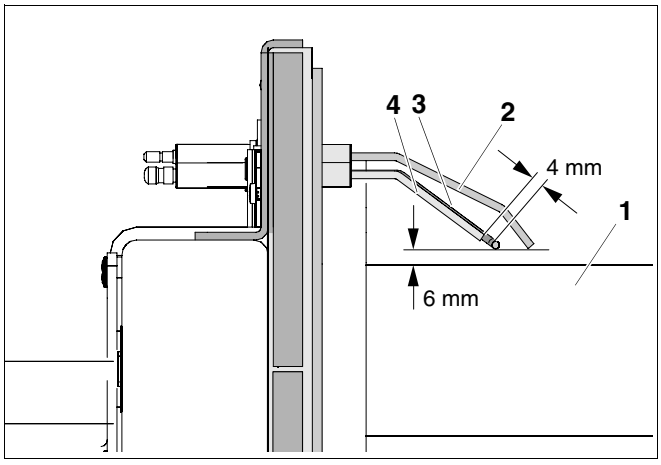

Fig. 56 Checking the electrode position (dimensions in mm)

1 *Burner rod*

2 *Ionisation electrode*

3 *Ignition electrode*

4 *Ignition electrode*

Refitting detached parts

- Reassemble all boiler parts that were removed for inspection and maintenance purposes in the reverse order.
- Check all gaskets for wear and damage.
- Replace gaskets if necessary.
- Check the flat gasket in the flange and replace, if necessary, after completion of the inspection and maintenance work.

USER NOTE

There is an indicator window on the top of the flange to enable the presence of a gasket to be checked from the outside.

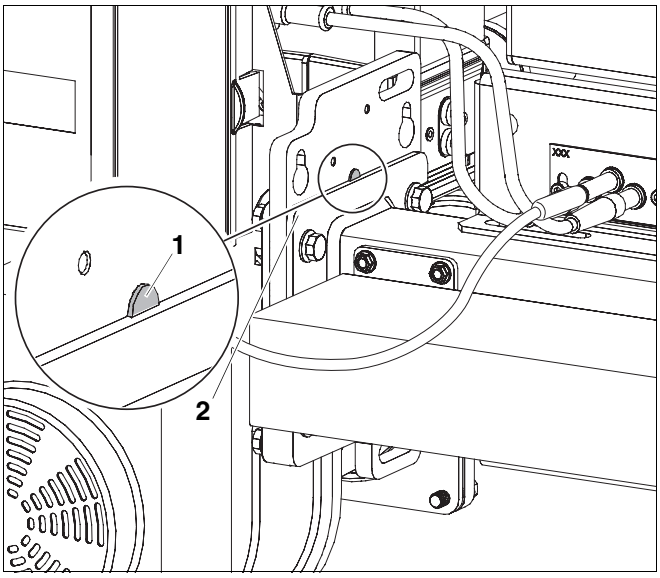

Fig. 57 Checking that the gasket is inserted

1 *Indicator window on flange*

2 *Flange*

10.7 Checking for leaks during operation

CAUTION!

SYSTEM DAMAGE

through short circuits.

- Cover the blower and other at-risk areas before searching for leaks.
- Never apply leak detector spray to cableways, plugs or electrical leads. Never let any spray drop down onto such areas.

- Start the boiler and check the flange for leaks under full load.
- Check all around the flange for leaks using a leak detector spray.
- For further leak tests (➔ Chapter 8.14, page 42).

10.8 Checking the ionisation current

To ensure fault-free operation, the ionisation current at partial and full load (and burning flame) should be at least 3 μA.

The ionisation current (flame current) can be read from the RC30 programming unit in "SERVICE MENU MONITOR DATA" (➔ Chapter 8.12.1, page 39).

10.9 Completing inspection/maintenance

10.9.1 Removing meters

USER NOTE

- Follow the instructions for the BC10 and RC30.

If you are not using an RC30 programming unit for the boiler, please note the following when completing the inspection/maintenance procedure:

- Remove the RC30 programming unit.
- If a Logamatic 4000 control is connected to the boiler, it can be switched on after the RC30 programming unit has been removed.

10.9.2 Installing casing parts

- Install casing parts (➔ Chapter 8.15, page 42).

10.9.3 Confirming inspection/maintenance

- Sign the inspection and maintenance report in this manual.

10.10 Inspection and maintenance reports

- Sign off all inspection work as completed and enter the relevant date.

The inspection and maintenance reports are also designed as templates.

	Inspection work	Page	Full load	Partial load	Full load	Partial load
1.	Check the general condition of the heating system (visual and function check)	46	☐		☐	
2.	Check the gas and water components of the system for:					
	Internal leaks	47	☐		☐	
	Visible signs of corrosion		☐		☐	
	Signs of ageing		☐		☐	
3.	Check the heating system operating pressure	50	☐		☐	
4.	Check the air supply/ventilation and flue pipe connections	30	☐		☐	
5.	Record actual values:	37				
	Draught		_____ Pa	_____ Pa	_____ Pa	_____ Pa
	Gross flue gas temperature t_A		_____ °C	_____ °C	_____ °C	_____ °C
	Air temperature t_L		_____ °C	_____ °C	_____ °C	_____ °C
	Net flue gas temperature $t_A - t_L$		_____ °C	_____ °C	_____ °C	_____ °C
	Carbon dioxide content (CO_2) or oxygen content (O_2)	50	_____ %	_____ %	_____ %	_____ %
	Flue gas losses q_A		_____ %	_____ %	_____ %	_____ %
	Carbon monoxide content (CO), airless		_____ ppm	_____ ppm	_____ ppm	_____ ppm
6.	Function tests:					
	Check the ionisation current	59	_____ µA	_____ µA	_____ µA	_____ µA
7.	Check for leaks during operation	42	☐		☐	
8.	Check the demand-dependent settings of the control device (see control device documentation)	–	☐		☐	
9.	Final checks of the inspection work	–	☐		☐	
	Confirm the professional inspection Company stamp/date/signature					

	Full load	Partial load	Full load	Partial load	Full load	Partial load	Full load	Partial load
1.	☐		☐		☐		☐	
2.								
	☐		☐		☐		☐	
	☐		☐		☐		☐	
	☐		☐		☐		☐	
3.	☐		☐		☐		☐	
4.	☐		☐		☐		☐	
5.								
	_____ Pa	_____ Pa	_____ Pa	_____ Pa	_____ Pa	_____ Pa	_____ Pa	_____ Pa
	_____ °C	_____ °C	_____ °C	_____ °C	_____ °C	_____ °C	_____ °C	_____ °C
	_____ °C	_____ °C	_____ °C	_____ °C	_____ °C	_____ °C	_____ °C	_____ °C
	_____ °C	_____ °C	_____ °C	_____ °C	_____ °C	_____ °C	_____ °C	_____ °C
	_____ %	_____ %	_____ %	_____ %	_____ %	_____ %	_____ %	_____ %
	_____ %	_____ %	_____ %	_____ %	_____ %	_____ %	_____ %	_____ %
	_____ ppm	_____ ppm	_____ ppm	_____ ppm	_____ ppm	_____ ppm	_____ ppm	_____ ppm
6.								
	_____ µA	_____ µA	_____ µA	_____ µA	_____ µA	_____ µA	_____ µA	_____ µA
7.	☐		☐		☐		☐	
8.	☐		☐		☐		☐	
9.	☐		☐		☐		☐	

USER NOTE

If you identify, during the inspection, that maintenance work is necessary, carry out the work immediately in accordance with requirements.

	Demand-dependent maintenance work	Page					
1.	Cleaning the heat exchanger and burner	51	☐	☐	☐	☐	☐
2.	Confirm that maintenance was carried out by a properly qualified person Company stamp/date/signature						

11 Troubleshooting

11.1 Recognising and rectifying faults

In case of a fault, the relevant fault code will flash on the control panel display. The programming unit shows faults as plain text messages.

A fault exists if the display flashes and indicates something other than the current boiler water temperature or an operating message.

Example: "6A" = burner does not start

Please refer to the control panel ➔ documentation for an overview of fault and service codes, as well as possible causes and remedial measures.

- Press and hold down the "Reset" button for approx. 5 seconds to clear the fault.

The display shows "rE" whilst the reset is implemented. A reset is only possible if a fault message is flashing.

The fault is cleared when the display shows the standard operating message again. Should the fault recur, repeat the reset two or three times.



CAUTION!

SYSTEM DAMAGE

through frost.

The heating system can freeze up in cold weather if it has been switched OFF through a fault shutdown.

- Immediately rectify the fault and restart the heating system.
- If this is not possible, protect your heating system against freezing by draining the central heating and DHW pipework at the lowest possible point.

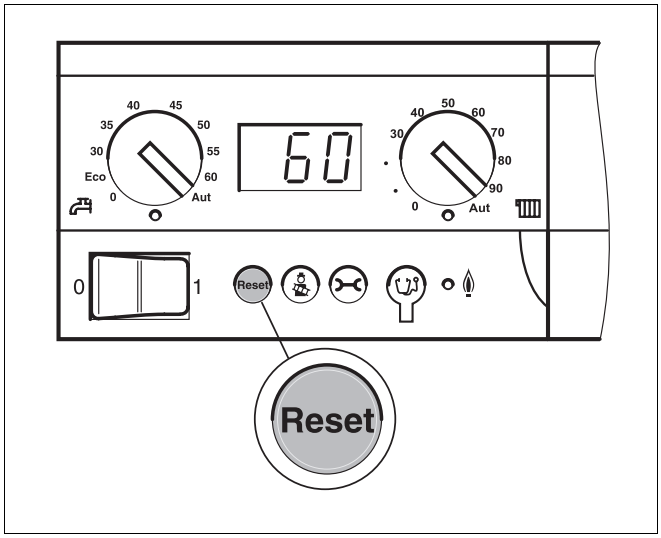

Fig. 58 Clear the fault by pressing the "Reset" button

12 Sensor curves

WARNING!

RISK TO LIFE

from electric shock.

- Isolate the heating system before taking any readings.

Always measure the temperatures being compared (room, flow, outside and flue gas temperatures) near the respective sensor. The curves depict mean values and are subject to tolerances. Check the resistance at the cable ends.

Boiler water, return and flow sensor

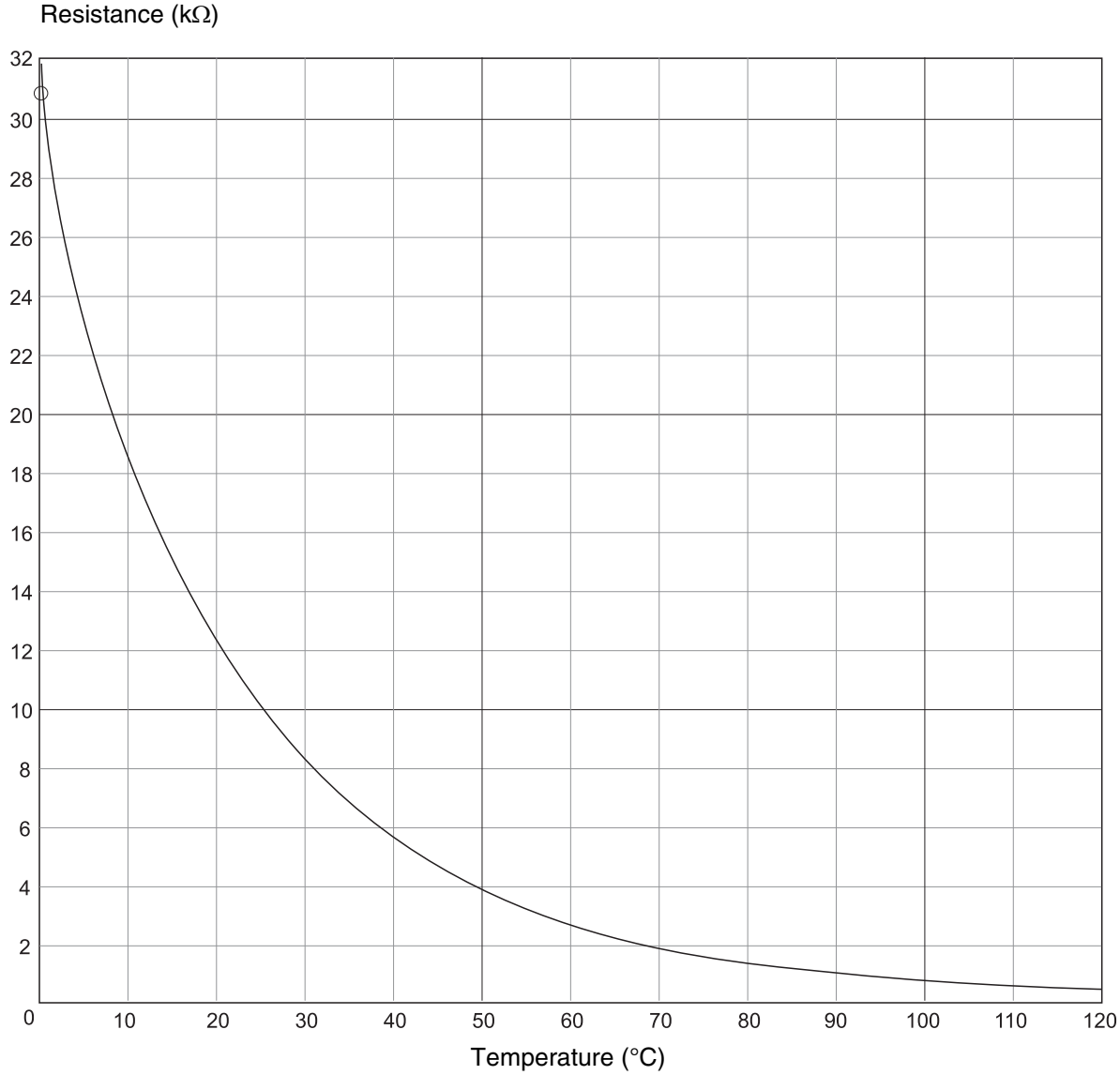

USER NOTE

Two identical so-called dual sensors installed in the sensor housing are used as boiler flow sensors.

USER NOTE

All sensors on the GB312 have the same sensor curve.

13 Index

B

Boiler fill & drain valve 29
Boiler room 5
Burner factory settings 31
Burner, removal 55
Burn-up 58

C

Carbon dioxide content 8
Carbon dioxide content, measuring 50
Casing parts, installing 42
Cleaning blade 56
Clean-out cover 56
CO_2 content, measuring 50
Commissioning 28
Condensate drain 22
Connections 7
Control panel, fitting 25
Corrosion 10

D

Declaration of conformity 11
DHW cylinder 21
Dimensions 7
Dirt trap 19
Disposal 5
Draught 8, 38
Dry cleaning 56

E

Electrode 58
Emergency stop switch – heating system 32

F

Faults, recognising and rectifying 64
Flue gas connection, making 17
Fuel supply 25

G

Gas connection 25
Gas connection pressure, checking 41
Gas leaks, checking 28, 42, 47, 59
Gas smell 4
Gas throughput 9
Gas train 8, 33

H

Handle positions, lifting 14
Heat exchanger, cleaning 56

I

Ionisation current 59

L

Leaks (hot water side) 24
Logamatic 4000 . . . . . 33, 40, 51, 60
Logamatic BC10 base controller 32

M

Main shut-off valve 32
Mains power, connecting 26
Maintenance, as-required 45
Module 26

N

Neutralisation device 23

O

Operating pressure, checking 50
Operating pressure, creating 29
Original parts 4

P

Panels, front and side, removing 13
Pressure drop, water 9
Pressure gauge 29

R

RC30 programming unit 33, 40, 51, 60
Report, commissioning 43
Reports, inspection and maintenance 61

S

Scale formation 10
Sensor curves 65
Shutting down 44
Siphon 22, 23, 57
Specifications 7
Supply air connection, balanced flue operation 18
Supply air membrane 30

T

Temperature sensor curves 65
Test nipple 29, 51
Test port 51
Tools 5
Transport 13

W

Wall clearances 16
Water, topping up 50
Wet cleaning 57

Your local heating contractor:

Buderus

BBT Thermotechnik GmbH, D-35573 Wetzlar
www.heiztechnik.buderus.de
info@heiztechnik.buderus.de