Buderus

Installation and maintenance instructions

Oil-fired special boiler
Logano G225 with Logatop BE burner



Please read carefully prior to installation and maintenance.

1 Safety . . . 4
- 1.1 About this manual . . . 4
- 1.2 Correct use . . . 4
- 1.3 Key to symbols . . . 4
- 1.4 Please observe these notes . . . 4
  - 1.4.1 Installation tips . . . 4
  - 1.4.2 Tips regarding the boiler room . . . 4
- 1.5 Tools, materials and accessories . . . 5
- 1.6 Disposal . . . 5
- 1.7 Declaration of Conformity . . . 5

2 Product description . . . 6

3 Specifications . . . 7
- 3.1 Specification for boilers with integral burners . . . 7
  - 3.1.1 Boiler room and environmental conditions . . . 8
  - 3.1.2 Combustion air supply conditions . . . 9
  - 3.1.3 Fuel conditions . . . 9
  - 3.1.4 Mains power supply conditions . . . 9
  - 3.1.5 Conditions for hydraulics and water quality . . . 9

4 Scope of supply . . . 10

5 Transporting the boiler . . . 11

6 Positioning the boiler . . . 12
- 6.1 Wall clearances . . . 12

7 Boiler block assembly . . . 13
- 7.1 Assembly when delivery as loose sections . . . 14
  - 7.1.1 Preparation of boiler sections . . . 14
  - 7.1.2 Driving nipples home . . . 15
  - 7.1.3 Preparing the central section . . . 15
  - 7.1.4 Inserting the packing cord . . . 16
  - 7.1.5 Knocking the central section into place . . . 16
  - 7.1.6 Boiler section alignment . . . 17
  - 7.1.7 Joining the boiler sections at the upper and lower boiler hubs with nipples . . . 17
  - 7.1.8 Fitting the anchor rods . . . 20
  - 7.1.9 Installing the feed pipe and connection profile . . . 20
  - 7.1.10 Screwing in the boiler sensor . . . 21
  - 7.1.11 Positioning the flue outlet . . . 22
  - 7.1.12 Closing the boiler hubs . . . 22
- 7.2 Checking for leaks . . . 22
  - 7.2.1 Preparing for a leak test . . . 23
  - 7.2.2 Leak test . . . 23
- 7.3 Installation when supplied as a pre-assembled block . . . 24
- 7.4 Installation steps for boilers supplied in sections and as a pre-assembled block . . . 24
  - 7.4.1 Fitting adjustable feet . . . 24
  - 7.4.2 Inserting the hot gas baffle plates . . . 25
  - 7.4.3 Installing the burner door . . . 25
  - 7.4.4 Fitting the boiler shell . . . 26
- 7.5 Positioning and levelling the boiler . . . 32

8 Boiler installation . . . 33
8.1 Making the flue gas connection . . . 33
8.1.1 Flue pipe sealing collar for underpressure operation (pressure at boiler < 0 mbar) . . . 33
8.1.2 Flue pipe sealing collar for overpressure operation (pressure at boiler > 0 mbar) . . . 34
8.2 Making the water connections . . . 34
8.2.1 Connecting central heating flow and return . . . 34
8.2.2 Connecting the safety flow and return . . . 35
8.2.3 Connecting DHW cylinder . . . 35
8.2.4 Installing the boiler fill and drain tap (accessory) . . . 35
8.3 Filling the heating system and checking for leaks . . . 36
8.4 Providing a mains electrical supply . . . 37
8.4.1 Fitting the control panel . . . 37
8.4.2 Mains power supply and connection of additional components . . . 37
8.4.3 Strain relief . . . 38
8.5 Installing casing parts . . . 38

9 Commissioning the heating system . . . 39
9.1 Creating operating pressure . . . 39
9.2 Making the heating system operational . . . 39
9.3 Switching on the heating system . . . 40
9.4 Starting up the burner . . . 40
9.5 Raising the flue gas temperature . . . 40
9.5.1 Removing the hot gas baffle plates . . . 41
9.5.2 Removing the hot gas check plate . . . 41
9.6 Installing the burner hood . . . 41
9.7 Setting the room programming unit/control panel . . . 42
9.8 Commissioning report . . . 43

10 Shutting down the heating system . . . 44
10.1 Standard shutdown . . . 44
10.2 Emergency measures . . . 44

11 Heating system inspection and maintenance . . . 45
11.1 Why is regular maintenance important? . . . 45
11.2 Preparing the boiler for cleaning . . . 45
11.3 Cleaning the boiler . . . 46
11.3.1 Cleaning the boiler with cleaning brushes . . . 46
11.3.2 Wet cleaning (chemical cleaning) . . . 47
11.4 Checking the heating system operating pressure . . . 47
11.5 Inspection and maintenance reports . . . 49

12 Troubleshooting . . . 52
12.1 Recognising and resetting faults . . . 52

13 Sensor curves . . . 53

14 Index . . . 54

We reserve the right to make any changes due to technical modifications.

1 Safety

1.1 About this manual

These installation and maintenance instructions contain important information for the safe and correct installation, initial start-up and maintenance of this boiler.

In the following, the oil-fired special boiler Logano G225 with Logatop BE burner will generally be referred to as the boiler.

These installation and maintenance instructions are designed for specialists, who – through their training and experience – are knowledgeable in handling heating systems and oil installations.

1.2 Correct use

The boiler is designed for generating heating water and DHW, for example, in homes or apartment buildings.

Please observe the details on the type plate and the specifications (➔ Chapter 3, page 7) to ensure the correct use of this equipment.

1.3 Key to symbols

The following symbols are used in this manual:



RISK TO LIFE

Identifies possible risks, which may lead to serious injury or death if appropriate care is not taken.



RISK OF INJURY/ SYSTEM DAMAGE

Identifies potentially dangerous situations, which might lead to medium or slight injuries or to material losses.



USER NOTE

Tip for the optimum utilisation and setting of the control(s) plus other useful information.

➔ Cross-references

Cross-references to a specific point or another document are identified by an arrow ➔.

1.4 Please observe these notes

Observe all local regulations and standards during installation and operation:

– Local building regulations relating to installation, combustion air supply and flue gas systems and connection to a chimney.
– Regulations for the electrical connection to the mains power supply.
– Regulations and standards relating to heating system safety equipment.



USER NOTE

Only use original Buderus components. Losses caused by the use of parts not supplied by Buderus are excluded from the Buderus warranty.

1.4.1 Installation tips



RISK TO LIFE

from electric shock.

- Only qualified electricians are permitted to carry out electrical work.
- Before you open the control device: Isolate all poles of the mains power supply and secure against unauthorised re-connection.
- Please observe all installation instructions.

1.4.2 Tips regarding the boiler room



RISK TO LIFE

through poisoning.
Insufficient ventilation can lead to dangerous flue gas leaks.

- Never block off or obstruct air ducts and vents or reduce their size.
- The boiler must not be operated until the obstruction has been removed.
- Inform the system user in writing of the fault and associated danger.



RISK TO LIFE

through toxic flue gases.

- In open flue operation, ensure that no mechanical air-handling equipment withdraws combustion air from the boiler room, e.g. cooker hoods, dryers, ventilation equipment.



WARNING!

RISK TO LIFE

through toxic flue gases.

- Only operate these boilers with a chimney or flue gas system, which supplies the required draught during operation.



WARNING!

RISK OF FIRE

through flammable materials or liquids.

- Never store flammable materials or liquids in the immediate proximity of the boiler.

1.5 Tools, materials and accessories

For the installation and maintenance of the boiler, you will need standard tools as used in central heating as well as oil and water installations.

The following may also prove useful:

– Sack truck with strap
– Timber supports
– Cleaning brushes and/or chemical cleaning agent for wet cleaning

If the boiler is delivered in sections, you will also require the following:

– Compression tool 1.2 if the boiler is supplied in sections (➔ Compression tool documentation)
– Flat board
– White spirit
– Installation kit (accessory)
– Steel hammer and wooden or rubber mallet
– Half-round smoothing file
– Screwdriver (Philips and slotted head)
– Flat chisel
– Spanner SW 13, 19, 24, 36 and Allen key SW 19
– Support wedge, flat iron
– Cleaning rags and cloth
– Fine emery cloth
– Wire brush
– 3-in-1 oil
– Spirit level, ruler, chalk, straight edge
– Flange with air vent valve (for pressure test)

1.6 Disposal

- Dispose of packaging in an environmentally responsible manner.
- Dispose of all heating system components that have to be replaced at an authorised disposal site.

1.7 Declaration of Conformity

CE

The design and operation of this product conform to the applicable European directives and supplementary national requirements. Its conformity has been verified.

The Declaration of Conformity can be viewed at www.heiztechnik.buderus.de or alternatively can be requested from your nearest Buderus sales office.

2 Product description

This boiler is a low temperature boiler for oil combustion with modulating boiler water temperature control.

The boiler comprises:

– Control panel
– Boiler shell
– Boiler block with lagging
– Burner

The control device monitors and controls all electrical boiler components.

The boiler shell prevents energy losses and acts as a silencer.

The boiler block transfers the heat generated by the burner to the heating water. The lagging prevents energy losses.

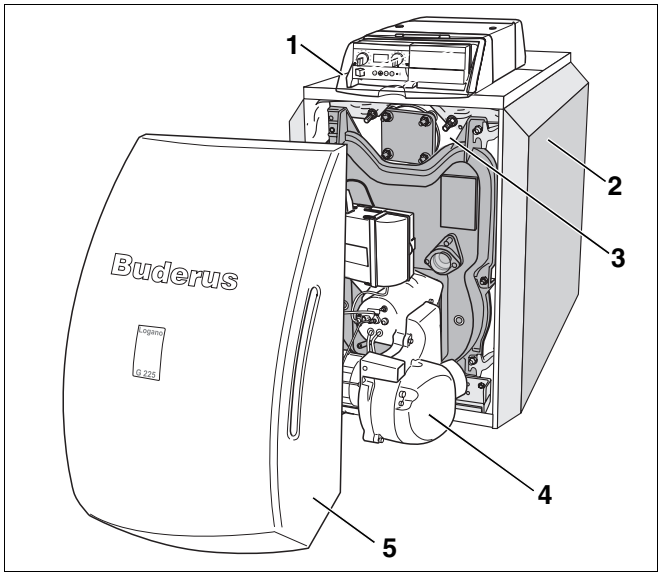

Fig. 1 Boiler without burner

1 *Control panel*
2 *Boiler shell*
3 *Boiler block with lagging*
4 *Burner*
5 *Burner hood*

3 Specifications

3.1 Specification for boilers with integral burners

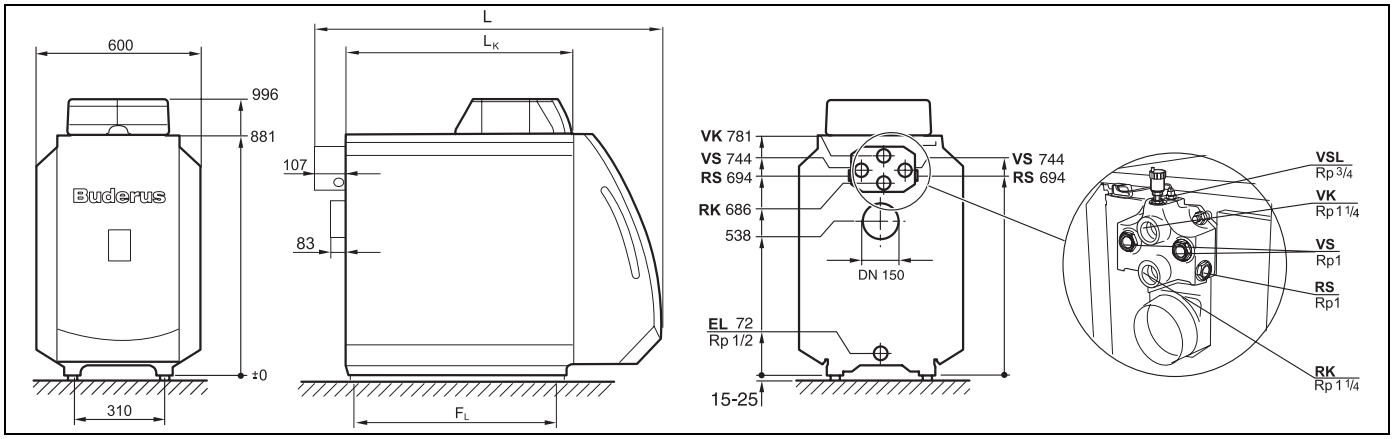

Fig. 2 Dimensions and connections (dimensions in mm)

Connections (for dimensions see the following tables):

VK = Boiler flow
RK = Boiler return
EL = Drain (connection for boiler fill and drain valve)
VS = DHW cylinder flow
RS = DHW cylinder return
VSL = Safety flow pipe (connection for an on-site air vent valve)

Boiler rating		45	55	68
Oil burner	**Type**	BE2.3-45	BE2.3-55	BE2.3-68
Boiler sections	**Number**	4	5	6
Rated output	**kW**	45	55	68 [4]
Combustion output	**kW**	48.1	59.0	73.0 [5]
Boiler water content	**l**	approx. 61	approx. 73	approx. 85
Gas content	**l**	68.8	85.1	101.4
Flue gas temperature [1]	**°C**	165	180	180
Flue gas mass flow rate	**kg/s**	0.0197	0.0242	0.0299 [6]
CO_2 content, oil	**%**	13.5		
Available draught	**Pa**	50	50	30
Hot gas resistance	**mbar**	0.35	0.20	0.35
Permissible flow temperature [3]	**°C**	100		
Permissible operating pressure	**bar**	4		
Maximum time constant of thermostat	**s**	< 1		
Maximum time constant of temperature monitor and high limit safety cut-out (STB)	**s**	< 1.2		
Electrical power		230 VAC, 50 Hz, ⊟ 10 A IP 40		

Tab. 1 Specification for boilers with integral burners

1 Flue gas temperature acc. to EN303.

2 Full/partial load (70 %)

3 Safety limit (high limit safety cut-out STB)
Max. possible flow temperature = high limit (STB) – 10 K
Example: Safety limit (STB) = 100 °C, max. possible flow temperature = 100 – 10 = 90 °C
The safety limit must comply with the requirements applicable in your country.

Values for Logano G225 - 65 kW (only apply to Spain):

4 65 kW

5 69.8 kW

6 0.0287 kg/s

Boiler rating		45	55	68
Overall boiler length (L)	**mm**	1102	1222	1342
Length of boiler block (L_K)	**mm**	626	746	866
Transport dimensions of a single boiler section (width/height/depth)	**mm**	460/820/150		
Transport dimensions of boiler block (width/height/depth)	**mm**	460/820/ Length L_K		
Length of combustion chamber	**mm**	548	668	788
Diameter of combustion chamber	**mm**	337		
Depth of burner door	**mm**	95		
Section feet clearance (F_L)	**mm**	455	575	695
Net weight [1]	**kg**	246	291	336

Tab. 2 Dimensions, weight and other details for boilers with integral burner

[1] *Weight incl. packaging approx. 6 – 8 % higher.*

3.1.1 Boiler room and environmental conditions

Operating conditions		Notes – detailed requirements
Temperature in the boiler room	+5 to +40 °C	
Relative humidity	max. 90 %	No dew formation or precipitation inside the boiler room
Dust/airborne seed	–	**Excessive dust inside the boiler room must be avoided when the boiler is operating, e.g.:** – Dust from building work **Combustion air supplied from outside must not be excessively loaded with dust or airborne seed; air filters should be fitted where required to prevent this:** – Air supply loaded with dust from dirt roads and paths – Air supply loaded with dust from production and processing facilities, e.g. quarries, mines, etc. – Airborne seed from composite blossom
Halogenated hydrocarbon compounds	–	**The combustion air must be free from halogenated hydrocarbon compounds.** – Identify the source of halogenated hydrocarbon compounds and prevent their ingress. Where this is impossible, route combustion air from areas that are not contaminated by halogenated hydrocarbon compounds. **Observe the following:** – Buderus Catalogue - Germany – Code of Practice K 3 in the Buderus catalogue.
Fans which extract air from the boiler room.	–	During burner operation, no mechanical air handling equipment may be operated which could extract combustion air from the boiler room, e.g.: – Cooker hood – Dryer – Ventilation equipment.
Small animals	–	Protect the boiler room and particularly the combustion air inlet against the ingress of small animals, for example by means of a grille.
Fire protection	–	Maintain clearances between the boiler and flammable materials in accordance with local regulations. Generally, maintain a minimum clearance of 40 cm. Never store flammable materials or liquids in the vicinity of the boiler.
Flooding	–	In case of an acute risk of flooding, disconnect the boiler in good time from its fuel and power supply before water enters the room. Any general and burner components or control equipment which comes into contact with water must be replaced before re-commissioning.

Tab. 3 Boiler room and environmental conditions

3.1.2 Combustion air supply conditions

Operating conditions	Boiler output (in case of several boilers = total output)	Air supply cross-section in cm^2 (unrestricted aperture)
Ventilation cross-section for combustion air from outside (split over a maximum of 2 apertures)	< 50 kW	min. 150 cm^2
	> 50 kW	min. 150 cm^2 plus an additional 2 cm^2 per kW, in excess of 50 kW

Tab. 4 Combustion air supply – Observe local requirements!

3.1.3 Fuel conditions

Operating conditions		Notes – detailed requirements
Permissible fuels for boilers with Logatop integral oil burner	–	Boilers with an integral oil burner must only be operated with fuel oil (DIN 51603). The oil may have a maximum kinematic viscosity of 6 mm^2/s (at 20 °C). This corresponds to Redwood-I 41.0 s (GB) or Sayboldt 45.5 s (USA). Reduce the maintenance/cleaning interval accordingly, if poor quality fuel oil is used.
Contamination	–	Technically free of contaminants (for example dust, water vapour, liquid), i.e. constant operation will not lead to the accumulation of contaminants causing a reduction in the cross-section of valves, strainers and filters.

Tab. 5 Fuels

3.1.4 Mains power supply conditions

Operating conditions		Notes – detailed requirements
Mains power supply voltage	195 – 253 V	Observe the voltage range of the burner and control devices used. The housing/boiler must be earthed for functional and personal protection reasons.
Fuse	10 A	
Frequency	47.5 – 52.5 Hz	Sinusoidal voltage curve
Protection	–	IP40 (protection against touch and the ingress of foreign bodies > 1 mm Ø, not water protection)

Tab. 6 Power supply

3.1.5 Conditions for hydraulics and water quality

Operating conditions		Notes – detailed requirements
Operating pressure (overpressure)	0.5 – 4.0 bar	
Permissible site test pressure	1.0 – 5.2 bar	
Protection against over-temperatures via TR thermostat	50 – 90 °C	
Protection against over-temperatures via STB high limit safety cut-out	100 °C	
Water quality	–	Only use drinking water to fill and top up the boiler. We recommend a pH value of 8.2 – 9.5.

Tab. 7 Hydraulic system and water quality

4 Scope of supply

- After delivery, check all packaging for perfect condition.
- Check that the delivery is complete.

Boiler as assembled block

Components	Piece	Packaging
Boiler block	1	1 pallet
Boiler casing	1	1 carton
Lagging	1	1 plastic packaging
Burner, burner hood, burner door and installation material [1], technical documentation for burner and boiler	1	1 carton
Control device, technical documentation for control device		1 carton

Tab. 8 Scope of supply

[1] *The adjustable feet are stored inside the packaging of the burner hood.*

Boiler supplied in sections

Components	Piece	Packaging
Front and rear section	1	1 pallet
Central sections		loose
Fittings	1	1 carton
Boiler casing	1	1 carton
Lagging	1	1 plastic packaging
Burner, burner hood, burner door and installation material [1], technical documentation for burner and boiler	1	1 carton
Control device, technical documentation for control device	1	1 carton

Tab. 9 Scope of supply

[1] *The adjustable feet are stored inside the packaging of the burner hood.*

5 Transporting the boiler

This section explains how to transport your boiler safely.



CAUTION!

SYSTEM DAMAGE

through impact.

- Please observe the handling instructions on the packaging to protect components susceptible to impact damage.



USER NOTE

- Protect connectors against dirt if the boiler is not immediately taken into use.



USER NOTE

Dispose of packaging in an environmentally responsible manner.



CAUTION!

RISK OF INJURY

through inadequate securing during transport.

- Use only suitable means for transportation, e.g. a sack trolley with strap, a stair or step trolley.
- Secure the load against falling.

6 Positioning the boiler

This section details how to install and position the boiler inside the boiler room.

CAUTION!

SYSTEM DAMAGE

through frost.

- Install the boiler in a room where it is safe from the risk of freezing.

6.1 Wall clearances

Where possible install the boiler with the recommended wall clearances (➔ table). Reducing the minimum clearances makes the boiler more difficult to access.

The base or foundation, on which the boiler is to stand, must be perfectly flat and level.

You may fit the burner door with hinge on the l.h. or the r.h. side.

Dimension	Wall clearance	
A	Recommendation	1300
	Minimum	1000
B	Recommendation	700
	Minimum	400
C	Recommendation	400
	Minimum	100
L	see "Specification" section	

Tab. 10 Recommended and minimum wall clearances (dimensions in mm)

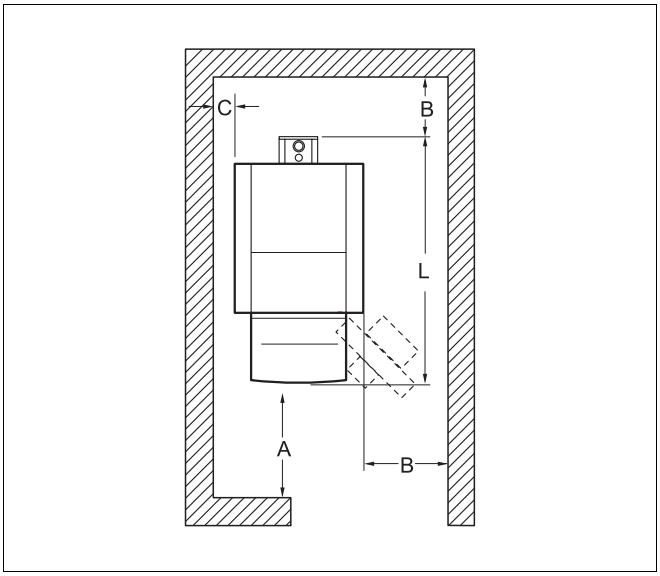

Fig. 3 Boiler room clearances (boiler positioned on the left-hand or right-hand side)

USER NOTE

Where applicable, allow extra wall clearances for additional components, for example DHW cylinder, pipe connections, flue gas silencer or other components on the flue gas side.

7 Boiler block assembly

The on-site installation is carried out using individual sections if, because of physical limitations, a boiler block cannot be assembled as a complete unit.

For the further installation of pre-assembled boiler sections, see (➔ Chapter 7.3, page 24).

CAUTION!

RISK OF INJURY

through inadequate securing during transport.

- Use only suitable means for transportation, e.g. a sack trolley with strap, a stair or step trolley.
- Secure the load against falling.

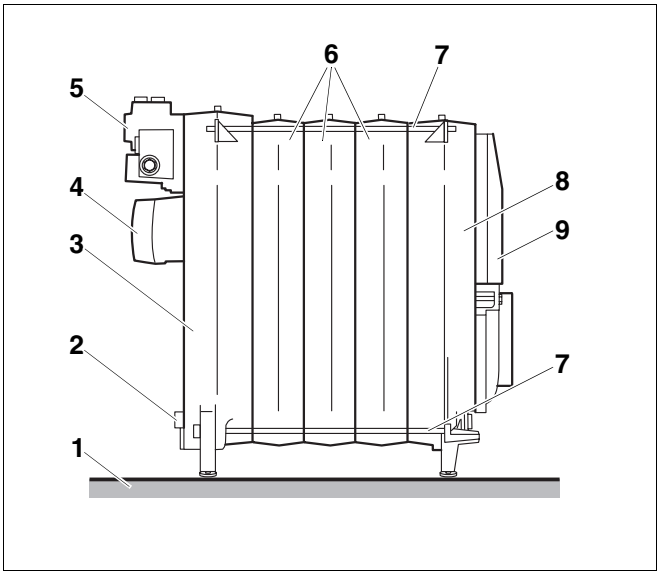

Fig. 4 Boiler block in the assembled state

1 *Foundation/installation location*
2 *Drain*
3 *Rear section*
4 *Flue outlet*
5 *Connection profile*
6 *Central sections*
7 *Anchor rods*
8 *Front section*
9 *Burner door*

7.1 Assembly when delivery as loose sections

- Assemble all boiler sections in accordance with the following instructions and diagrams.

7.1.1 Preparation of boiler sections

- Position the rear section onto two timber supports.
- Clean the boiler hubs with emery paper and a rag.
- Use a file to remove any burrs.
- Clean the packing spring or packing groove where required using a wire brush and rag.

CAUTION!

RISK TO HEALTH and RISK OF BURNING

through released vapours and easily flammable cleaning agents.

- When using red lead putty, adhesives and solvents, ensure adequate ventilation inside the boiler room.
- When using solvents, avoid naked flames, incandescence and sparks.
- Please observe the manufacturer's handling and safety instructions.

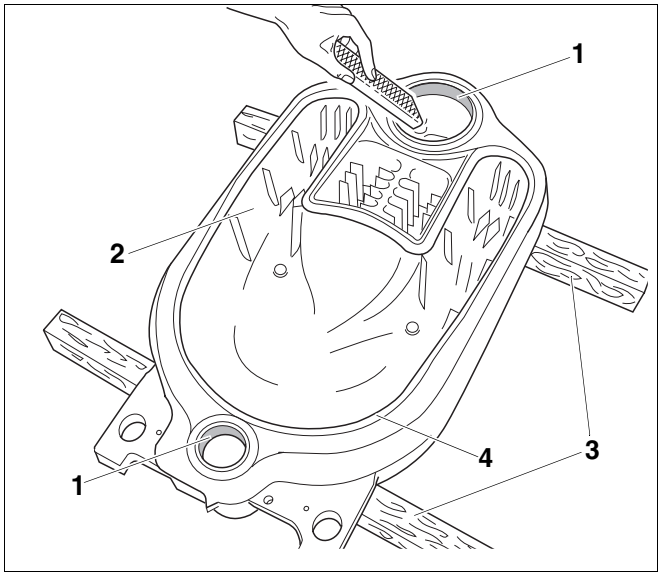

Fig. 5 Removing burr

1 *Boiler hubs*
2 *Rear section*
3 *Timber supports*
4 *Sealing spring*

- Clean the hub sealing faces with a rag soaked in white spirit.
- Evenly coat the boiler hub sealing faces with red lead putty.
- Coat the packing spring or packing groove with adhesive (adhesive base).

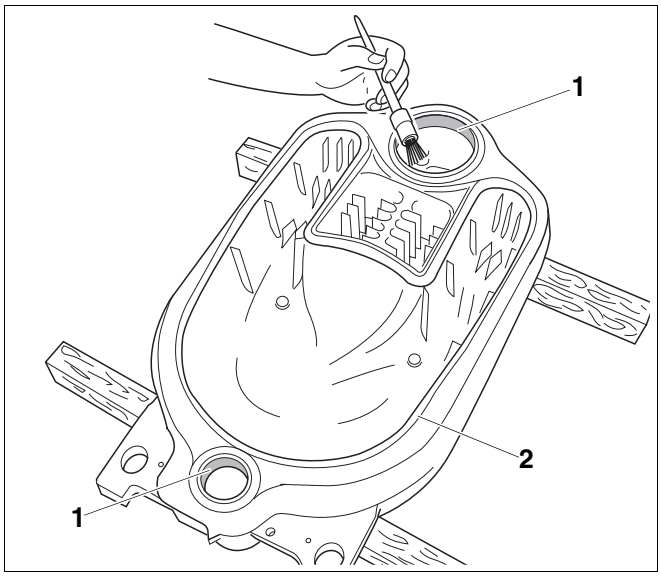

Fig. 6 Coating the boiler hubs with red lead putty

1 *Boiler hub sealing face*
2 *Sealing spring*

7.1.2 Driving nipples home

- Clean the nipples with a cloth soaked in white spirit.
- Evenly coat the nipples with red lead putty.
- Insert the nipples straight into the upper and lower hub of the rear section and hammer home securely with alternate heavy blows.

USER NOTE

- Afterwards, the nipples should protrude approx. 30 mm from the respective boiler hub.

- Use a file to remove any burrs.

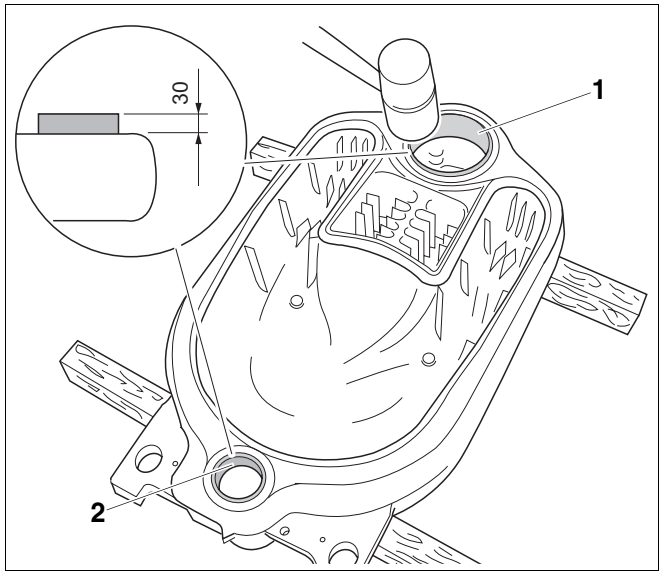

Fig. 7 Driving nipples home

1 *Nipple in the upper boiler hub*

2 *Nipple in the lower boiler hub*

7.1.3 Preparing the central section

Prepare the central section in the same way as the rear section (➔ Chapter 7.1.1, page 14).

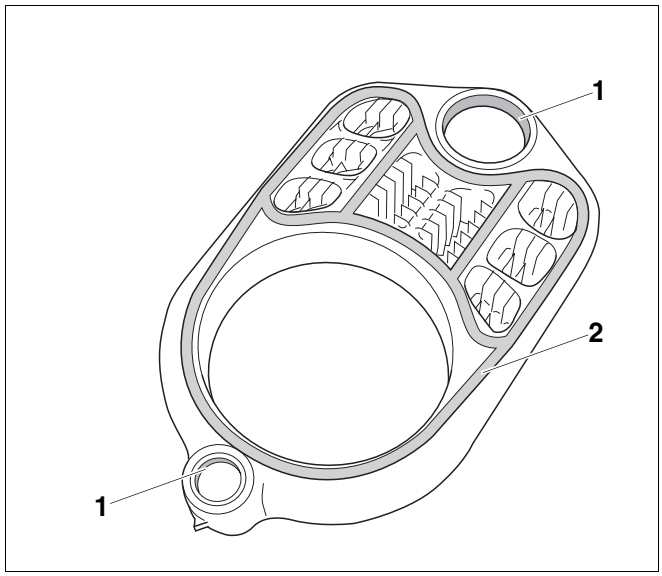

Fig. 8 Preparing the central section

1 *Boiler hub sealing face*

2 *Packing grooves*

7.1.4 Inserting the packing cord

- Unroll the required length of packing cord from the roll supplied.

CAUTION!

SYSTEM DAMAGE

through leaking boiler sections.

- Never attempt to seal the faces between the boiler sections by stretching the packing cord.
- Carefully insert the packing cord into the boiler section packing grooves.

- Peel the backing paper from the packing cord as you feed the cord into the packing groove.
- Insert the flexible packing cord into the packing groove, starting in the upper boiler hub area, and lightly press in.
- At the butt joints, overlap the packing cord by 2 cm and press firmly together.

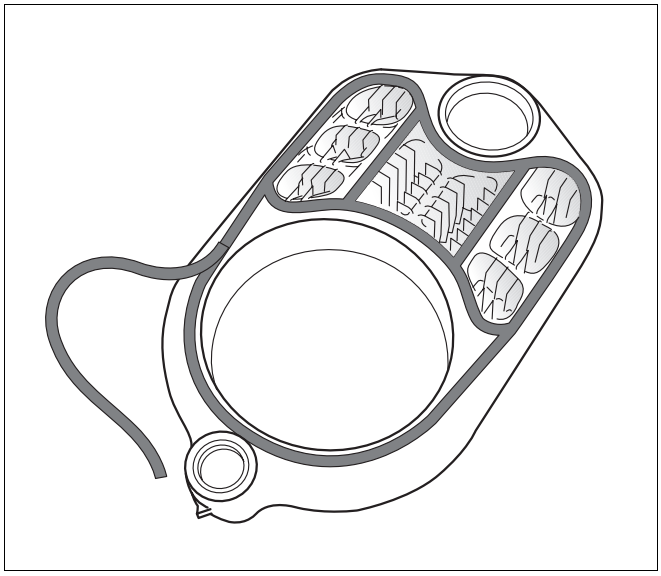

Fig. 9 Inserting the packing cord

7.1.5 Knocking the central section into place

- Turn the centre section around and locate with the upper and lower boiler hubs on the nipples of the rear section.
- Drive the centre section onto the rear section using a wooden or a rubber mallet.

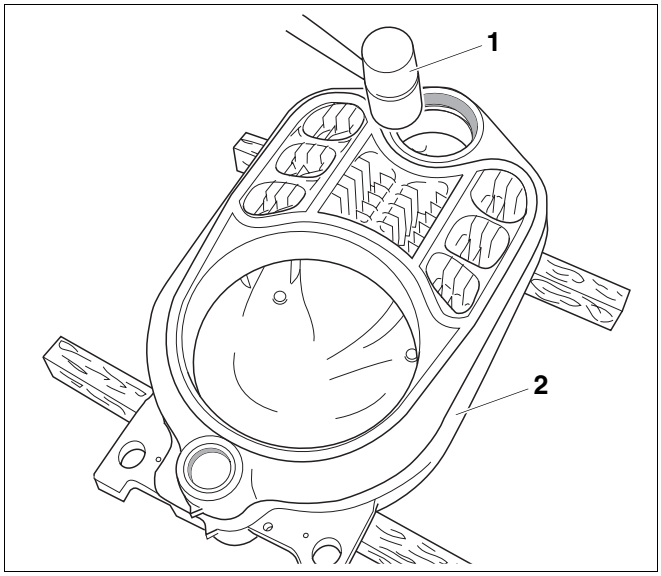

Fig. 10 Knocking the central section into place

1 *Wooden or rubber mallet*

2 *Rear section*

7.1.6 Boiler section alignment

CAUTION!

RISK OF INJURY

through inadequately secured boiler sections.

- Secure the boiler block section against tipping.

- Right the part assembled block comprising two boiler sections.
- Position a flat board underneath the centre section so that the boiler block is slightly tilted for the rest of the assembly process.

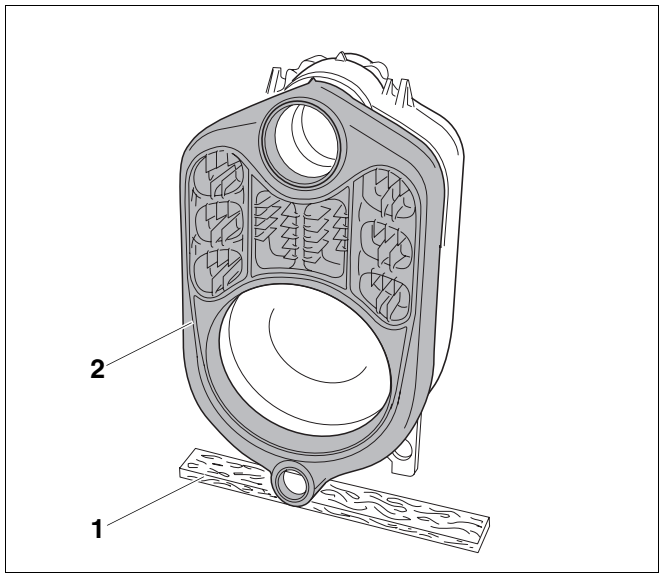

Fig. 11 Righting the part assembled block

1 *Flat board*

2 *Centre section*

7.1.7 Joining the boiler sections at the upper and lower boiler hubs with nipples

CAUTION!

BOILER DAMAGE

through an unsuitable compression tool.

- Only use the compression tool suitable for your boiler, i.e. size 1.2 (➔ compression tool documentation).

CAUTION!

COMPRESSION TOOL DAMAGE

The compression tool may be damaged or destroyed if you compress pull rods with loose threaded connections.

- Check the threaded connection of the pull rods after every compression, and tighten, if required.
  The pull rod is correctly positioned if it is fully inserted and no thread is showing.
- Keep the thread of the compression tool clean. Dirty threads can damage the compression tool during compression.

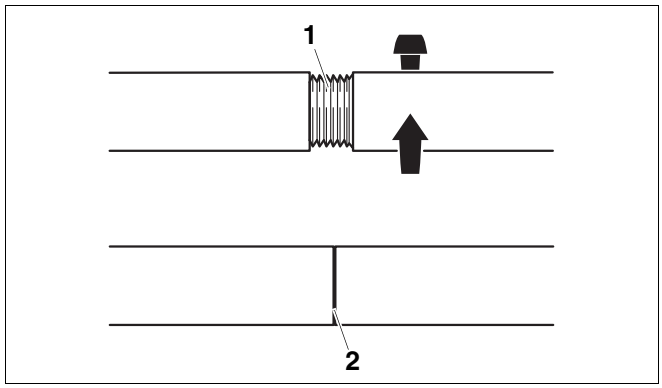

Fig. 12 Making the pull rod threaded connection

1 *Pull rod threaded connection (incorrectly joined)*

2 *Pull rod threaded connection (correctly joined)*

- Push one pull rod each through the lower and the upper boiler hub of the part assembled block.

CAUTION!

BOILER DAMAGE

through incorrectly positioned additional flanges.

Leaks may occur if the auxiliary flange sits on the packing spring/groove of the boiler section during the compression process.

- Ensure that the auxiliary flange lies level on the boiler hubs.

- Push the auxiliary flange onto the pull rods of the lower and upper boiler hubs.
- Push the mating flange onto the pull rod of the lower and upper boiler hubs, and secure with the appropriate wedges.
- Thread the compression units onto the pull rod threads.

USER NOTE

- Push the compression units onto the pull rod threads so that two thread windings protrude from the compression units.

- Hold the pull rods in the middle of the boiler hubs and slightly draw together the compression tools using the compression unit.

- Place both ratchet spanners on the compression unit tightening nuts and draw the boiler sections together by evenly tightening the nuts.

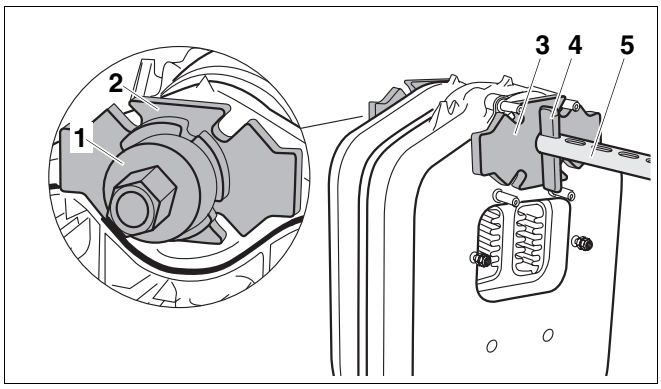

Fig. 13 Compression tool afitted to the upper boiler hub

1 *Compression unit*
2 *Auxiliary flange (Ø 135 × 25 upper boiler hub)*
3 *Mating flange (Ø 135 × 25 upper boiler hub)*
4 *Wedge*
5 *Pull rod in the upper boiler hub*

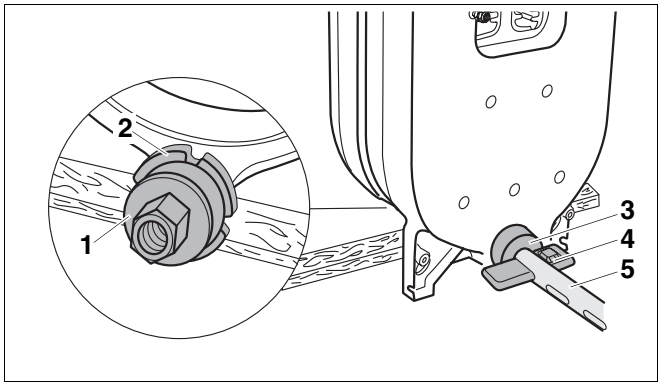

Fig. 14 Compression tool fitted to the lower boiler hub

1 *Compression unit*
2 *Auxiliary flange (Ø 80 × 25)*
3 *Mating flange (Ø 80 × 25 lower boiler hub)*
4 *Wedge*
5 *Pull rod in the lower boiler hub*

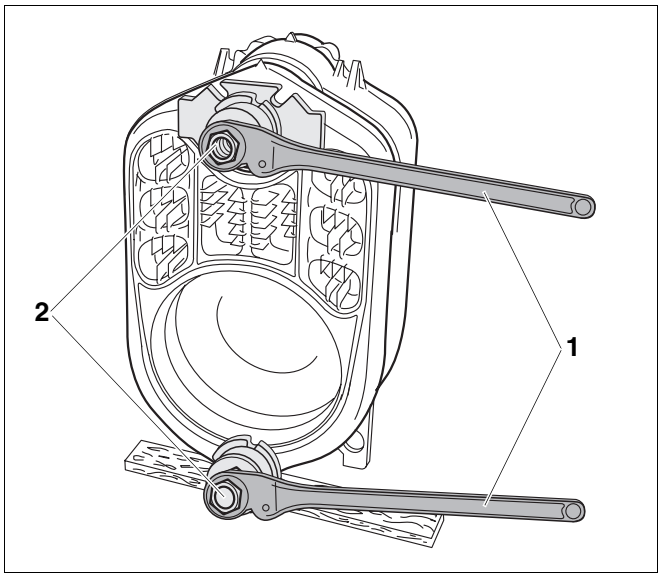

Fig. 15 Locating the ratchet

1 *Ratchet*
2 *Clamping nut*

CAUTION!

BOILER DAMAGE

through leaking boiler sections.

- Ensure that for each compression procedure, no more than one nipple joint (one nipple joint comprises two sections) is compressed.
- Never jam nipples into the boiler hubs of the boiler section.
- Stop pressing the sections together when the boiler hubs meet.

- Release and remove the compression tool.
- Hammer the nipples into the part assembled boiler block (➔ Chapter 7.1.2, page 15).
- Prepare all other centre sections as described above and then join using nipples.

Front section assembly

Due to the threaded studs, do not use the auxiliary flange at the front of the upper boiler hub when assembling the front section.

- Push the pull rod together with the compression unit through the upper boiler hub.
- Carry out all other steps as described (➔ Chapter 7.1.7, page 17).

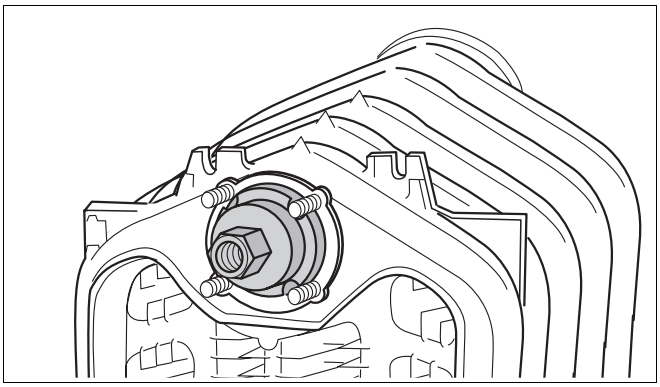

Fig. 16 Fitting the compression tool to the front section

7.1.8 Fitting the anchor rods

USER NOTE

- Insert the anchor rod before removing the compression tool.
  Never remove the compression tool first.

SYSTEM DAMAGE

through incorrect spring washer assembly.

CAUTION!

- Ensure that the spring washers are arranged opposite each other on the anchor rods.

- Insert the anchor rods and spring washers into the cast lugs on the l.h. and r.h. side and next to the lower boiler hubs.
- Tighten the nuts on the anchor rod threads by hand.
- Tighten the nuts 1 to 1½ turns on the anchor rods.
- Release and remove the compression tool.

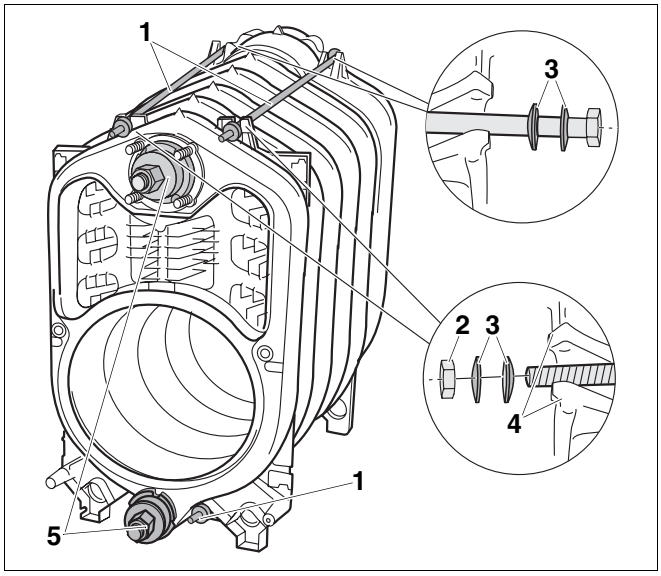

Fig. 17 Fitting the anchor rods – arrangement of the spring washers

1 *Anchor rods*
2 *Nut*
3 *Spring washers*
4 *Cast lugs*
5 *Compression tool*
A *Spring washer arrangement*

7.1.9 Installing the feed pipe and connection profile

The feed pipe and the connection profile are already fitted if the boiler block is supplied as a ready assembled unit.

USER NOTE

- If there is insufficient space behind the boiler, first push the feed pipe from the front of the boiler into the boiler before installing the connection profile (don't forget the boiler hub flat gasket).

- Secure the feed pipe to the connection profile using M 8 × 16 screws and the flat gasket.

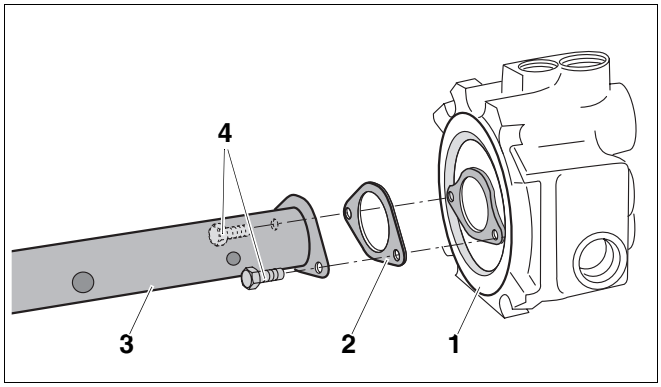

Fig. 18 Installing the feed pipe to the connection profile

1 *Connection profile*
2 *Flat gasket*
3 *Feed pipe*
4 *M 8 × 16 bolts (brass)*

- Take the nuts off the threaded studs.
- Push the flat gasket over the feed pipe.
- Push the feed pipe with the connection profile and flat gasket into the upper boiler hub at the rear of the boiler.

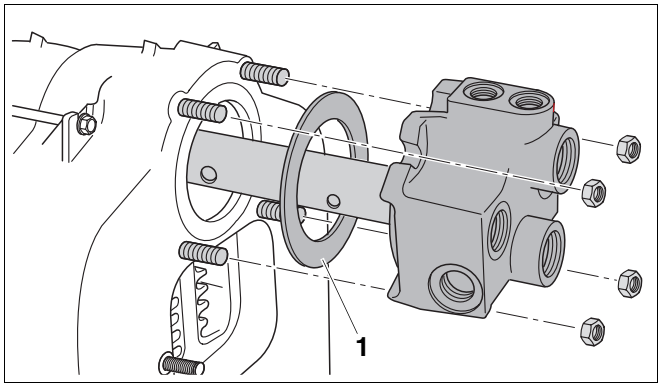

Fig. 19 Installing the feed pipe and connection profile

1 *Flat gasket*

- Locate the connection profile on the threaded studs and tighten the four nuts by hand.
- Evenly tighten the connection profile nuts diagonally using a torque wrench (torque: maximum 60 Nm).

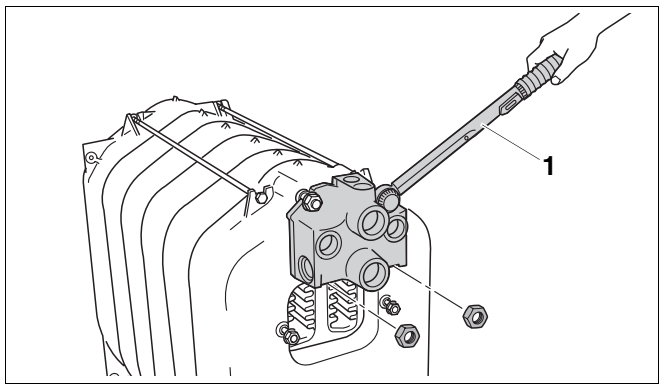

Fig. 20 Assembling the connection profile

1 *Torque wrench*

Seal connections that are not required using the plugs supplied. When the boiler is supplied as a pre-assembled block, these plugs will already have been fitted.

- Insert plugs with flat gaskets into the connections that are not required.

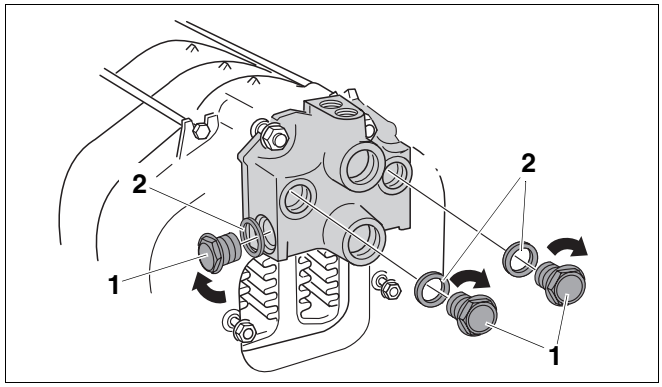

Fig. 21 Sealing connections that are not required

1 *Plug*

2 *Flat gaskets*

7.1.10 Screwing in the boiler sensor

The boiler sensor is packed with the burner, burner hood and burner door.

The boiler sensor has already been screwed into a reducer in the factory.

- Screw in the assembled reducer/sensor unit.

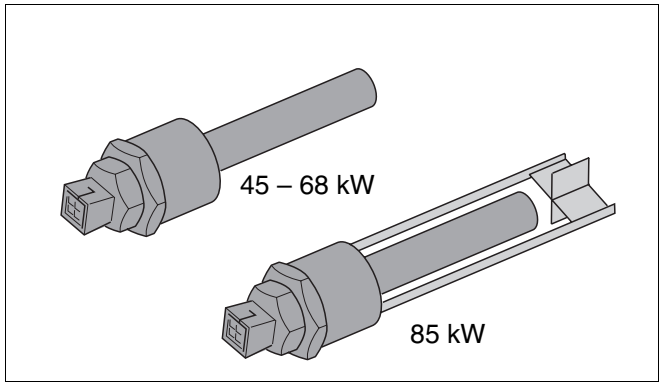

Fig. 22 Boiler sensor screwed into reducer without/with turbulator

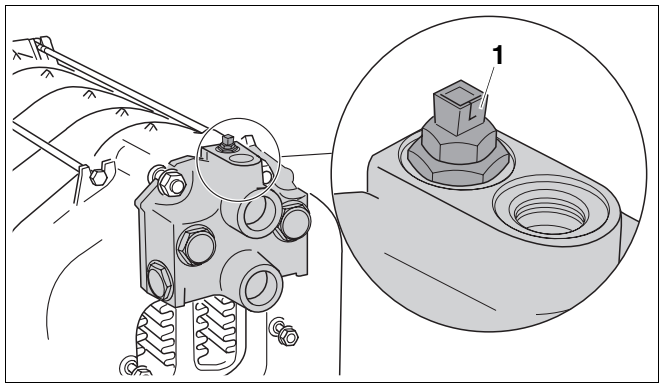

Fig. 23 Screwing in boiler sensor

1 *Boiler sensor*

7.1.11 Positioning the flue outlet

For this purpose, the flue outlet is equipped with packing cord.

- Remove the washers and nuts from the threaded studs.
- Position the flue outlet onto both threaded studs on the rear section and secure using nuts.

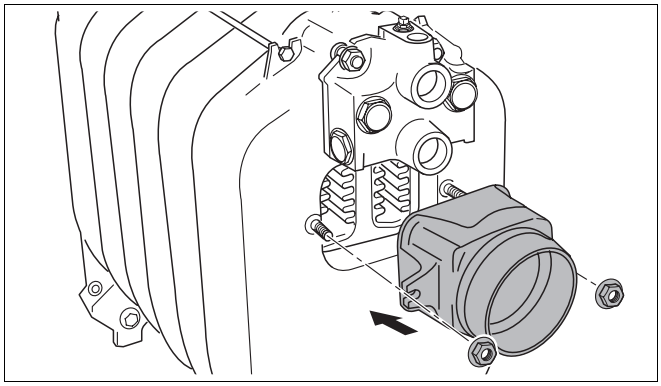

Fig. 24 Installing the flue outlet

7.1.12 Closing the boiler hubs

You will need the reducer, which is part of the standard delivery, to fit the on-site fill & drain valve.

- Seal the reducer into the lower boiler hub at the rear of the boiler.
- Fit the boiler fill & drain valve to the reducer.

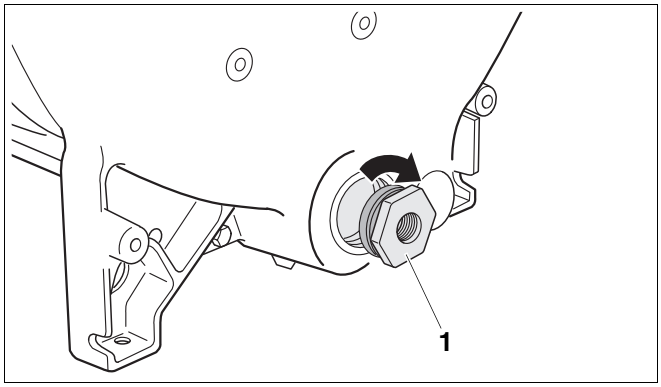

Fig. 25 Sealing in the reducer

1 *Reducer (R 1½" to Rp ½")*

- Close the upper boiler hub on the front section using the dummy flange.
- Insert the plug, together with its flat gasket, into the lower boiler hub.

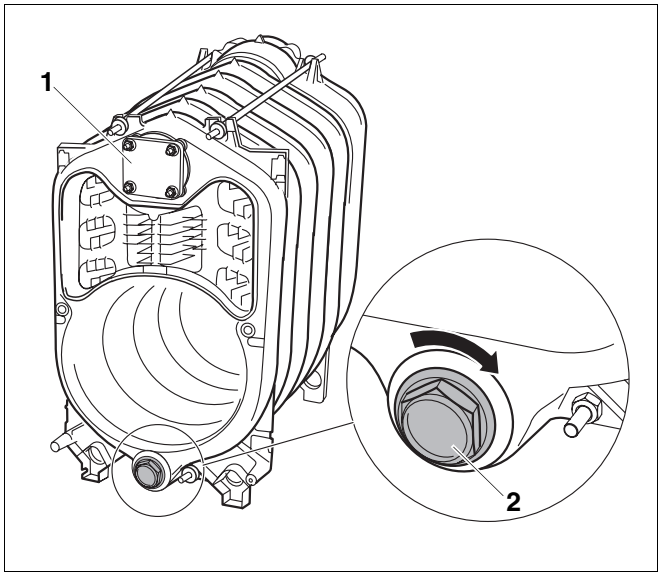

Fig. 26 Closing the boiler hubs on the front section

1 *Dummy flange*

2 *Plug*

7.2 Checking for leaks

Only carry out a boiler block leak test if the boiler was supplied in sections.

7.2.1 Preparing for a leak test

- Close all boiler hubs (➔ Chapter 7.1.12, page 22).
- Close the flow and return connections (install the air vent valve on the connection profile Rp ¾).

7.2.2 Leak test

Carry out a leak test with a test pressure of 5.8 bar (in accordance with the requirements of the European Pressure Vessel Directive).

USER NOTE

Please note the rating plate details.

Use a pressure gauge class 1.0 for the pressure test.

CAUTION!

SYSTEM DAMAGE

through overpressure.

- Ensure that no pressure, control or safety equipment is fitted.

- Slowly fill the boiler block via the boiler fill & drain valve. Bleed at the highest point of the system, until water flows out of the air vent valve.

Leaking hub joints?

- If a hub joint is leaking, first drain the water through the fill & drain valve.
- Remove the water pipes.
- Remove the feed pipe.
- Release and remove the anchor rods.
- Separate the leaking boiler by driving flat wedges or chisels into the leaking part.

USER NOTE

- Clean the hubs before reassembly.
- Use new nipples and new packing cord for the reassembly.
- Compress the boiler block again.
- Fit the anchor rods and feed pipe.
- Install the water pipework.
- Repeat the leak test.

For further assembly of the boiler, see (➔ Chapter 7.4, page 24).

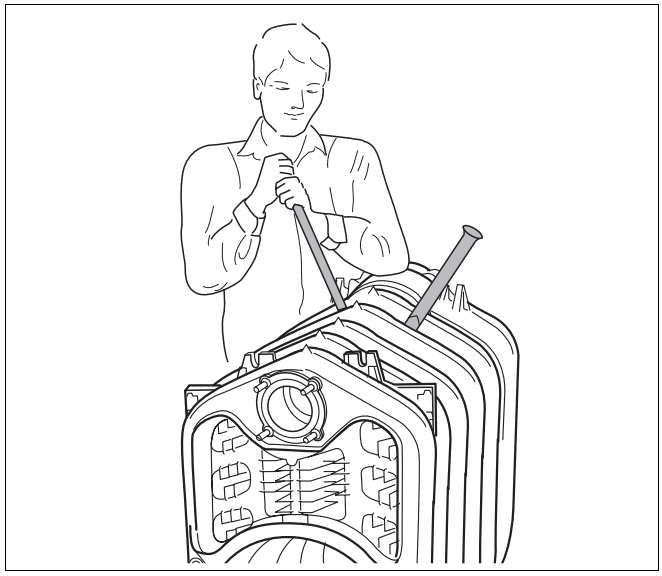

Fig. 27 Separating the boiler block

7.3 Installation when supplied as a pre-assembled block

Pre-assembled boiler blocks are subjected to a leak test in the factory.

- Cut through the straps.
- Remove the pallet prior to positioning the boiler block.



WARNING!

RISK TO LIFE

from falling materials.

- Ensure a suitable means for bearing the load is available.
- Observe all locally applicable Health & Safety at Work regulations relating to lifting equipment.

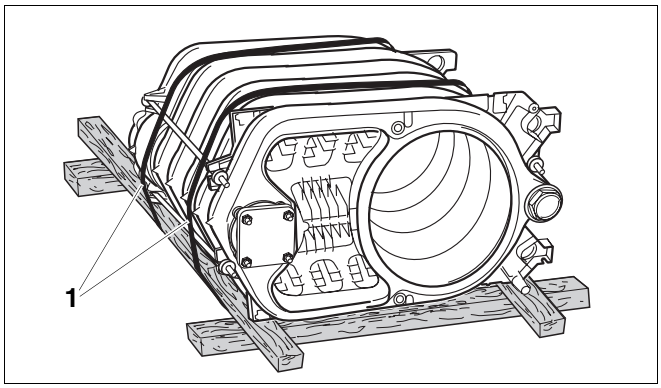

Fig. 28 Boiler block on pallet (as delivered)

1 *Securing straps*

7.4 Installation steps for boilers supplied in sections and as a pre-assembled block

Carry out the steps detailed in this chapter for deliveries in sections or as block. Any assembly discrepancies between the sectional and block delivery are highlighted in this text.

7.4.1 Fitting adjustable feet

Level the boiler using the adjustable feet (packaging ➔ standard delivery) to prevent air pockets forming inside the boiler.

- Tip the boiler or support it on a square timber.
- Insert the adjustable feet 5 – 10 mm.
- Gently set the boiler down.

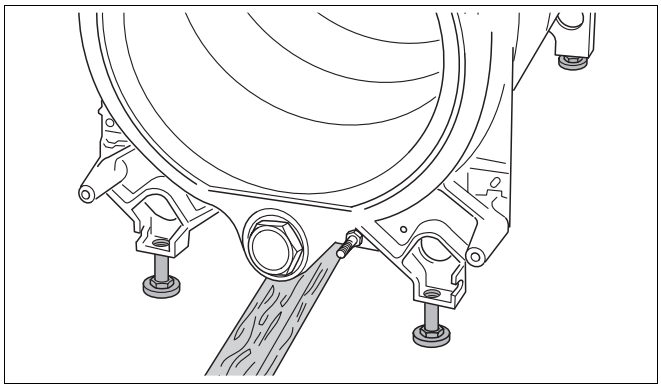

Fig. 29 Fitting adjustable feet

7.4.2 Inserting the hot gas baffle plates

- Remove the corrugated cardboard packaging when the block is supplied ready assembled.
- When the boiler is supplied in sections, remove the hot gas baffle plates from the carton containing the small iron fittings.
- Insert the hot gas baffle into the central second hot gas flue in accordance with the table below. The cast lugs should point towards the centre of the boiler.

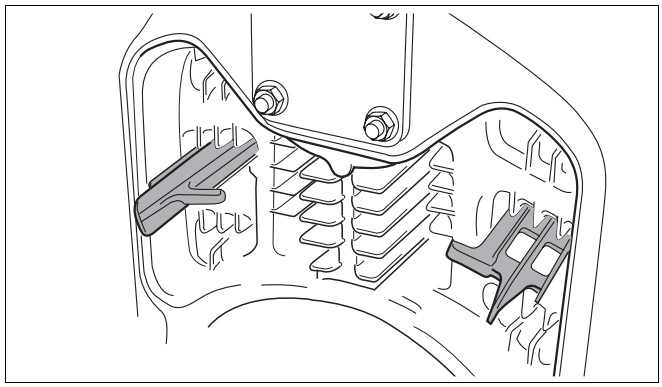

Fig. 30 Inserting the hot gas baffle into the second hot gas flue (here: centrally)

- Insert the hot gas baffle into the third hot gas flue in accordance with the table below. The cast lugs should point outwards.

Boiler size incl. oil burner		45	55	68
2nd Hot gas flue	top	–	–	–
	centre	–	2	–
	bottom	–	2	–
3rd Hot gas flue		2	–	–

Tab. 11 hot gas baffle plate arrangement

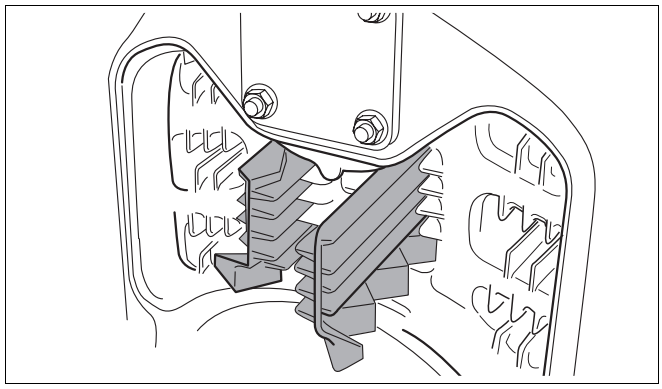

Fig. 31 Insert the hot gas baffle into the third hot gas flue

By removing the hot gas baffle, you can raise the flue gas temperature (➔ Chapter 9.5.1, page 41).

7.4.3 Installing the burner door

You can fit the burner door on the right-hand or on the left-hand side. In the following points, assembly on the right-hand side is described.

- Secure the two hinge pins to the front section using one M12 × 35 hexagon bolt for each.

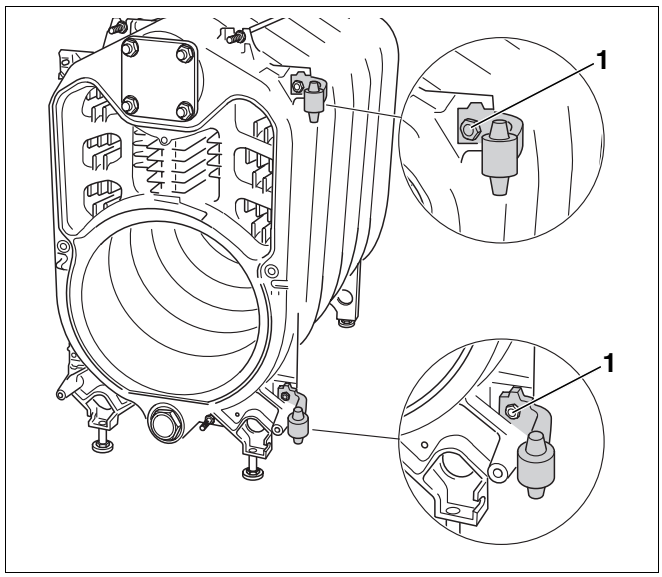

Fig. 32 Fitting the hinge pins (here: on the right-hand side)

1 *M12 × 35 hexagon bolt*

- Secure the two slotted hinge lobes to the burner door using one M12 × 25 hexagon bolt for each.
- Hook the burner door with the hinge lobes onto the hinge pins.
- Close the burner door.

CAUTION!

SYSTEM DAMAGE

through leaking burner door.

- Tighten the hexagon bolts of the burner door evenly.

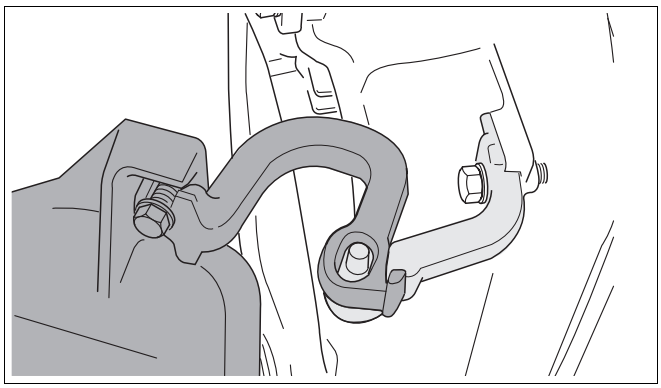

Fig. 33 Attaching the burner door (here: on the right-hand side)

1 *M12 × 25 hexagon bolt*

7.4.4 Fitting the boiler shell

Installing the boiler rear panel

- Insert the spacer pins into the rear section.

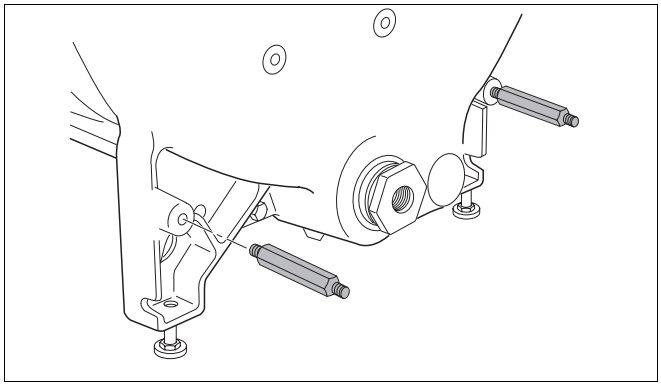

Fig. 34 Spacer pin installation

- Secure the boiler back panel with nuts to the threaded and spacer pins.

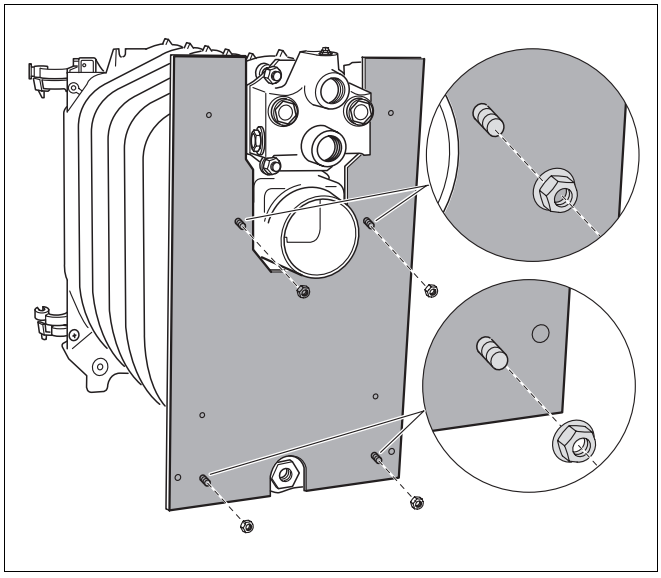

Fig. 35 Installing the boiler rear panel

Installing the upper tie-bar

- Secure the upper tie-bar to the anchor rod threads using the nuts supplied.

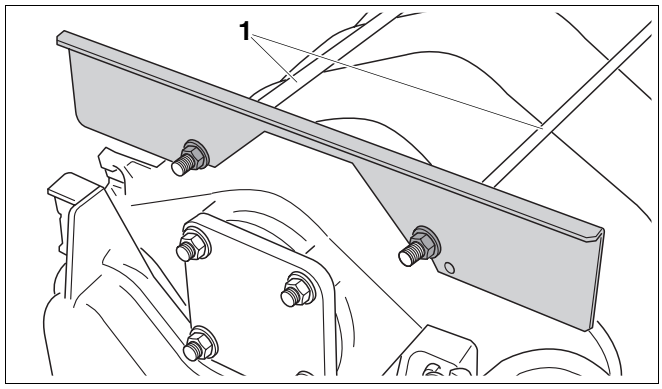

Fig. 36 Fitting the upper tie-bar

1 *Anchor rods*

Installing the lower tie-bar

- Secure the lower tie-bar to the front section using hexagon bolts.

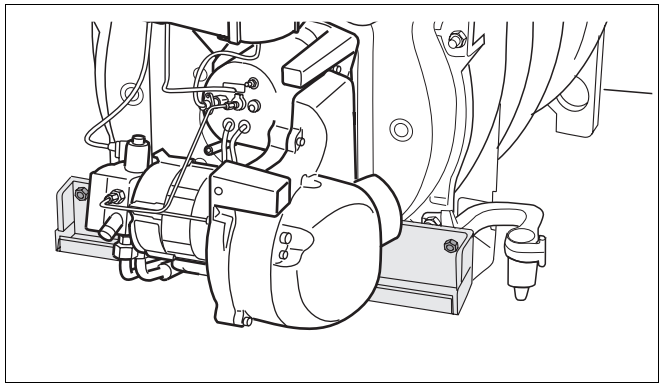

Fig. 37 Fitting the lower tie-bar

Installing the lagging

- Place the lagging over the boiler block.
- Push the lagging under the boiler block, in the direction of the arrow.
- Position the lagging tabs in front of the upper tie-bar and draw together with a spring clip.

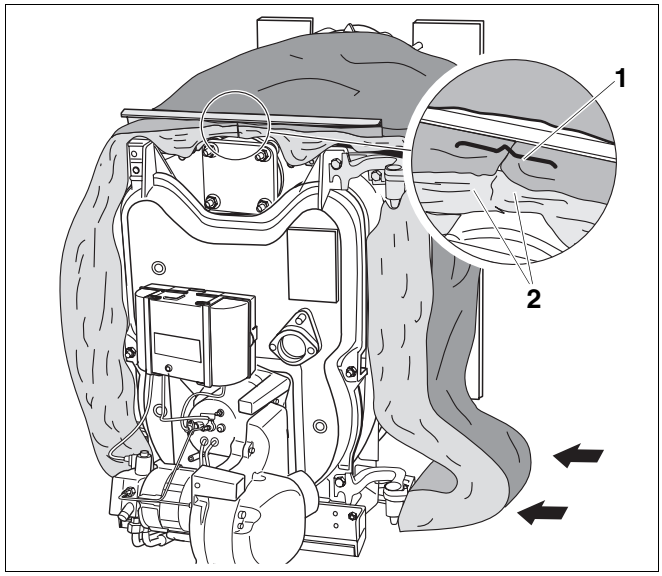

Fig. 38 Installing the lagging

1 *Spring clip*

2 *Lagging tabs*

Fitting the boiler sensor and communication cable

- Push the strain relief into the holes of the lower tie-bar.
- Lay the cables on the lagging.
- Insert the cables into the strain relief. The length hanging clear must be 70 to 75 cm.
- Secure the cables via the strain relief using two self-tapping screws.

The cables must always be laid as shown, regardless of whether the door opens to the right or to the left.

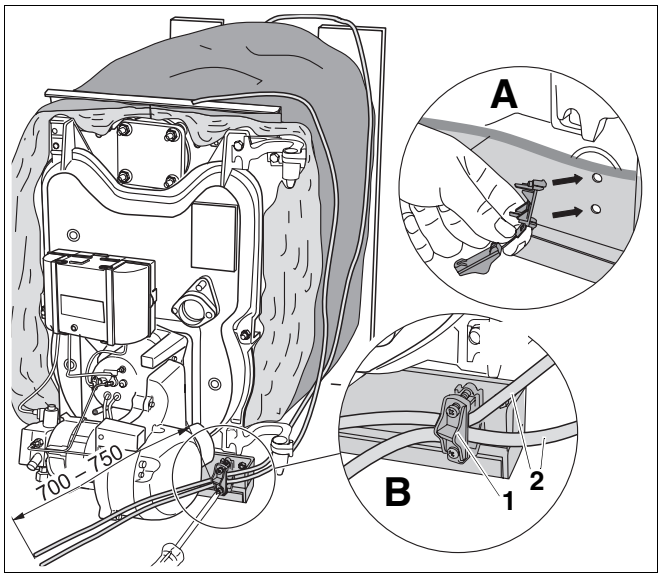

Fig. 39 Fitting the boiler sensor and communication cable

1 *Strain relief*

2 *Fitting the boiler sensor and communication cable*

A *Push the strain relief into the holes of the lower tie-bar*

B *Insert and secure the cables*

Fitting the mains supply cable

- Fasten the mains supply cable and line filter.
- Fit cable clips.
- Insert mains supply cable into the cable clip.

The mains supply cable must always be laid as shown, regardless of whether the door opens to the right or to the left.

Connecting cables to the SAFe

- Connect boiler sensor, communication and mains supply cables to the SAFe as shown in the connection diagram (➔ burner documentation).

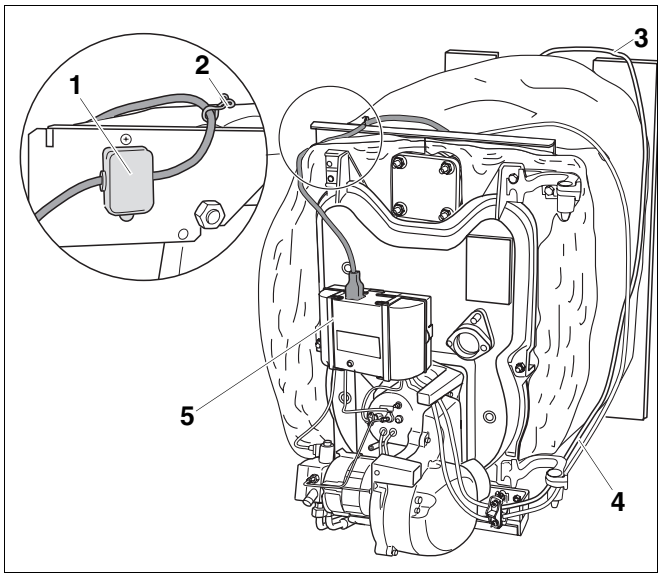

Fig. 40 Fitting the mains supply cable

1 *Mains supply cable with line filter*

2 *Cable clip*

3 *Boiler sensor cable*

4 *Communication cable*

5 *SAFe*

Fitting the side panels

Installation of the side panel on the left-hand and right-hand side is identical (this example: right-hand side panel).

- Push the snap nut onto the angled sheet steel of the side panel until it locks into the hole provided.

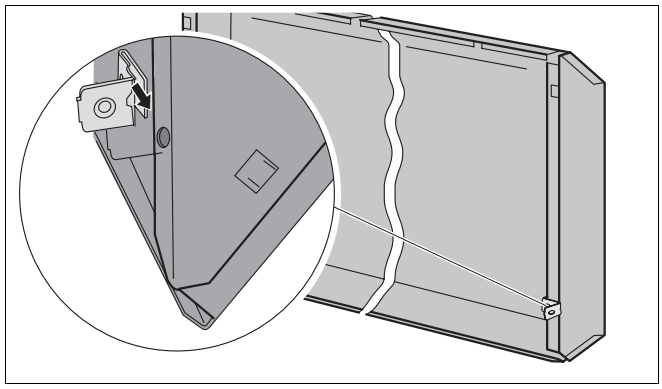

Fig. 41 Inserting the snap nut (here: right-hand side panel)

- Push the side panel into the angled part of the lower tie-bar.

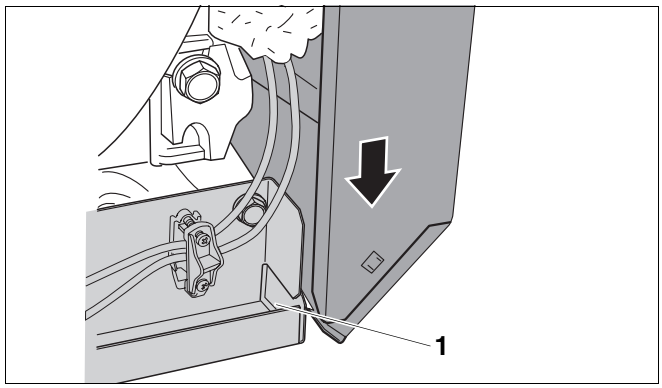

Fig. 42 Pushing the bottom front side panel into place

1 *Angled part of the lower tie-bar*

- Slightly lift the side panel.
- Slot the side panel upper cutout into the upper tie-bar.
- Slot the rear part of the side panel onto the extended hook.

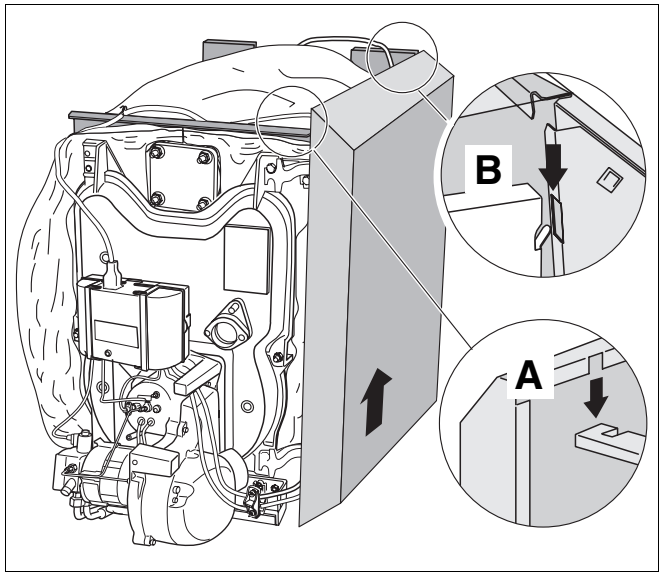

Fig. 43 Hooking-in the side panel

A *Upper tie-bar*

B *Extended hook*

- Push against the lower end of the side panel and secure to the rear panel using the snap nut.

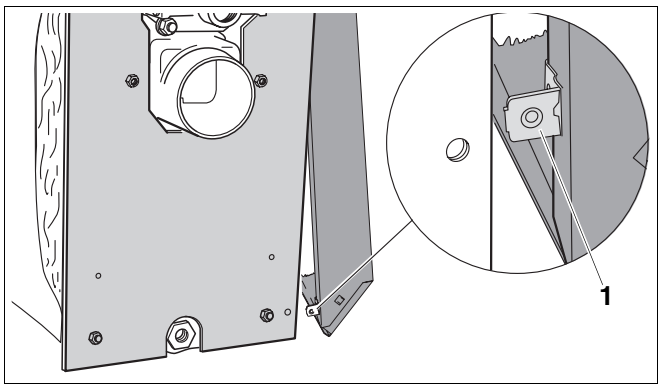

Fig. 44 Securing the side panel to the rear panel

1 *Snap nut*

- Fit bracket to left and right sides of side panel to fasten the burner hood (➔ Fig. 45).

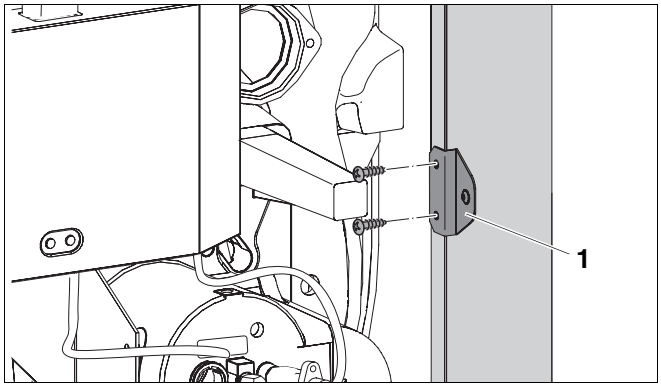

Fig. 45 Fitting brackets to side panels

1 *Bracket*

Installing the front boiler cover

- Slot the front boiler cover with its cutout onto the upper tie-bar and push back.
- Secure the front boiler cover to the side panels using two self-tapping screws.

USER NOTE

Installing the rear boiler cover (➔ Chapter 8.5, page 38).

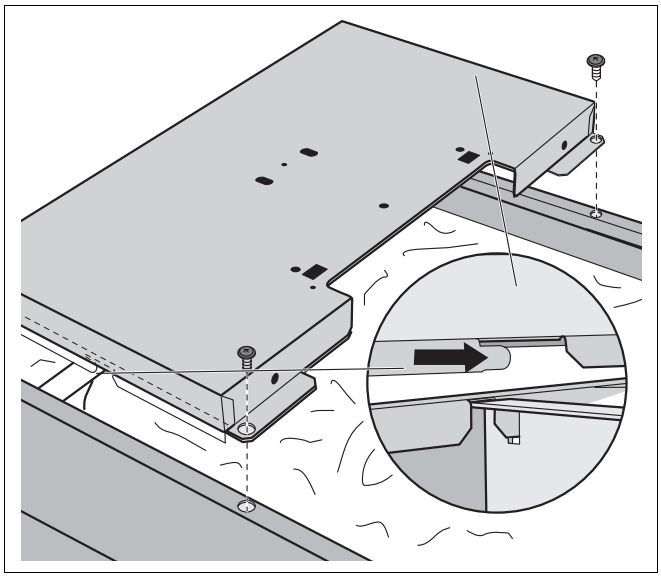

Fig. 46 Installing the front boiler cover

Screwing in the boiler sensor (only if supplied as a pre-assembled block)

In the case of pre-assembled block delivery, the boiler sensor must be screwed in now.

The boiler sensor is packed with the burner, burner hood and burner door.

The boiler sensor has already been screwed into a reducer.

- Screw in the assembled reducer/sensor unit (➔ Fig. 47).

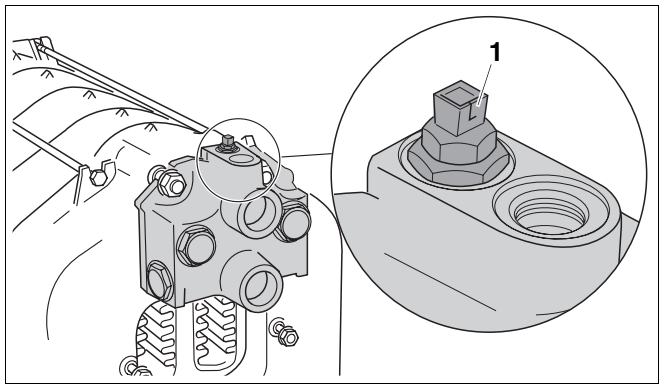

Fig. 47 Screwing in the boiler sensor

1 *Boiler sensor*

Installing the cable entry

- Secure the cable entry to the hole in the boiler rear panel.
- Slide the rubber sleeve over the sensor and attach boiler sensor cable (➔ Fig. 48).

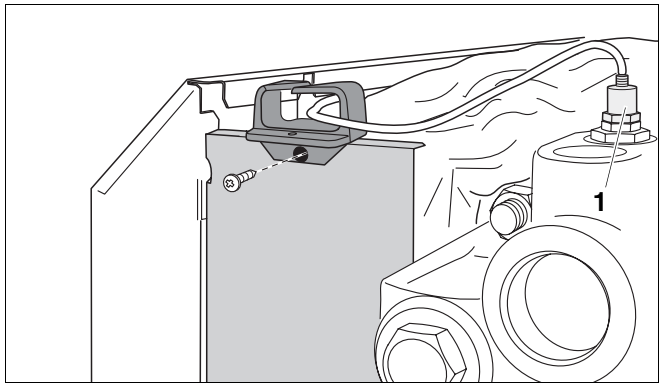

Fig. 48 Installing the cable entry

1 *Rubber sleeve*

Insulating the connection profile

- Cut out the connection profile insulating shells at the indicated and required positions.

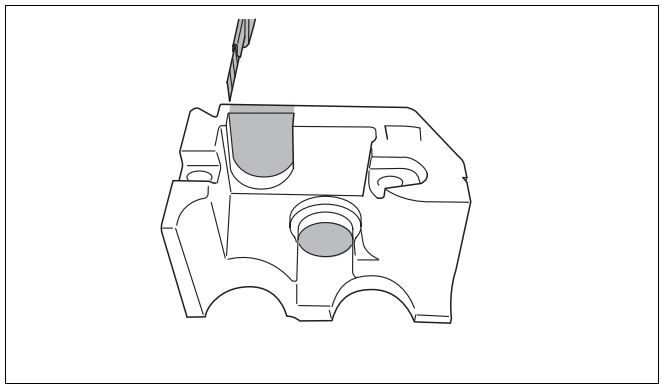

Fig. 49 Cutting out the insulating shells

- Push both insulating shells onto the connection profile.

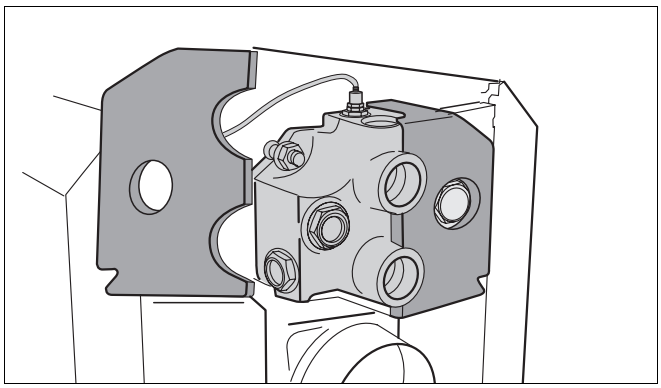

Fig. 50 Insulating the connection profile

- Push the radiation protection onto the insulating shells.

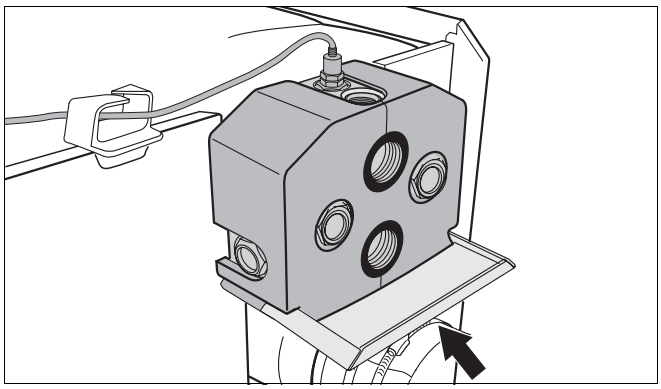

Fig. 51 Installing the radiation protection

7.5 Positioning and levelling the boiler

- Position the boiler in its final location.
- Level the boiler horizontally by turning the adjustable feet and using a spirit level.

USER NOTE

- Protect connectors against dirt if the boiler is not immediately taken into use.

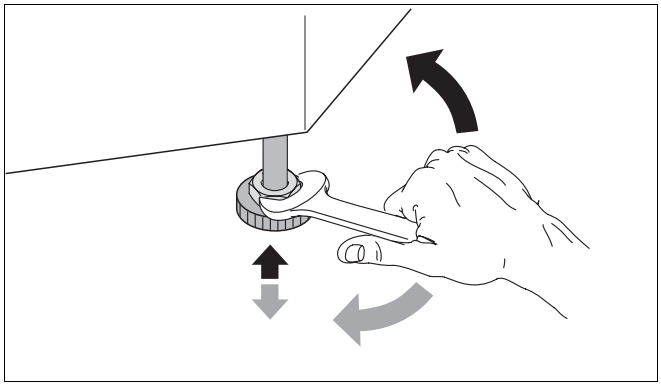

Fig. 52 Levelling the boiler horizontally

8 Boiler installation

This section details how to install your boiler correctly. These details include:

– Flue gas connection
– Water connections
– Electrical connection

For information on the fuel connection, please refer to the ➔ burner documentation.

8.1 Making the flue gas connection

- Create the flue gas connection in accordance with the requirements applicable in your country.

8.1.1 Flue pipe sealing collar for underpressure operation (pressure at boiler < 0 mbar)

We recommend that a flue pipe sealing collar (accessory) is used to ensure the best seal.

- Push the jubilee clips over the flue pipe.
- Push the flue pipe as far as possible onto the flue outlet.
- Place the flue pipe sealing collar around the joint flue pipe–flue outlet, so that it overlaps on top.
- Pull a jubilee clip onto the flue outlet and a second clip onto the flue pipe.
- Tighten the jubilee clips so that the flue pipe sealing collar fits smooth and snug.

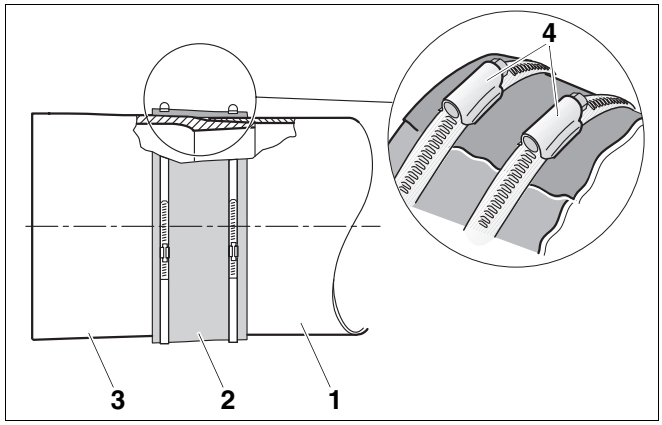

Fig. 53 Installing the flue pipe sealing collar (schematic)

1 *Flue pipe*
2 *Flue pipe sealing collar*
3 *Boiler flue outlet*
4 *Jubilee clips*

8.1.2 Flue pipe sealing collar for overpressure operation (pressure at boiler > 0 mbar)

The overpressure-tight flue pipe sealing collar (accessories, order no. 535 4404) must be fitted.

- Push flue pipe sealing collar with 2 jubilee clips onto the flue pipe.
- Push flue pipe and flue pipe sealing collar onto the boiler flue outlet.
- Tighten jubilee clips.

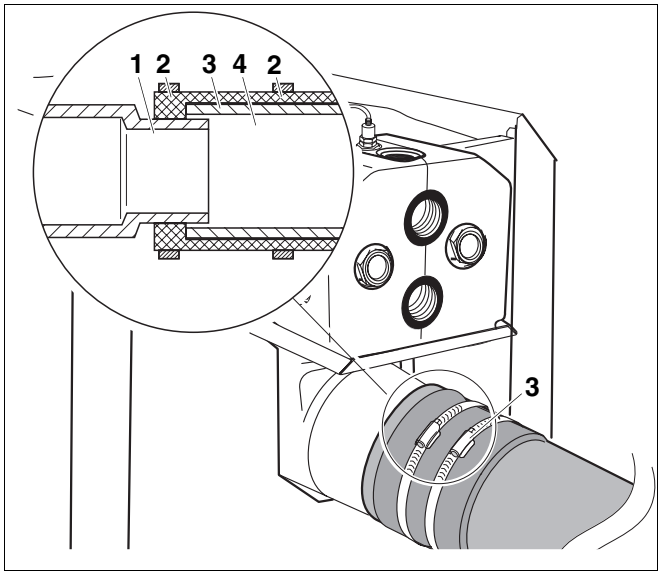

Fig. 54 Fitting the flue pipe sealing collar

1 *Flue outlet*
2 *Jubilee clips*
3 *Flue pipe sealing collar*
4 *Flue pipe*

8.2 Making the water connections

CAUTION!

SYSTEM DAMAGE

through leaking connections.

- Connect the pipes without stress to the boiler connections.

8.2.1 Connecting central heating flow and return

USER NOTE

We recommend the on-site installation of a dirt trap (accessory) into the central heating return to prevent contamination on the water side.

- Connect the central heating return to connector RK.
- Connect the central heating flow to connector VK.

VSL: Flow safety line
VK: Boiler flow
RK: Boiler return
VS: DHW cylinder flow
RS: DHW cylinder return
EL: Drain

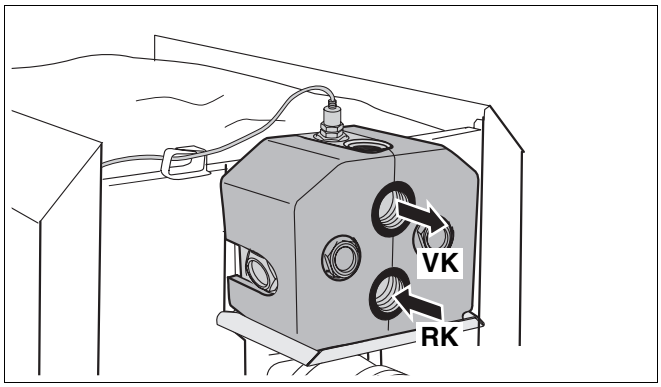

Fig. 55 Connecting central heating flow and return

8.2.2 Connecting the safety flow and return

We recommend the connection of a boiler safety set (accessory) and an air vent valve (accessory) to connector VSL.

CAUTION!

SYSTEM DAMAGE

through the connection of incorrect components to connector VSL.

- Never connect a summer line, DHW cylinder or another heating circuit to VSL.

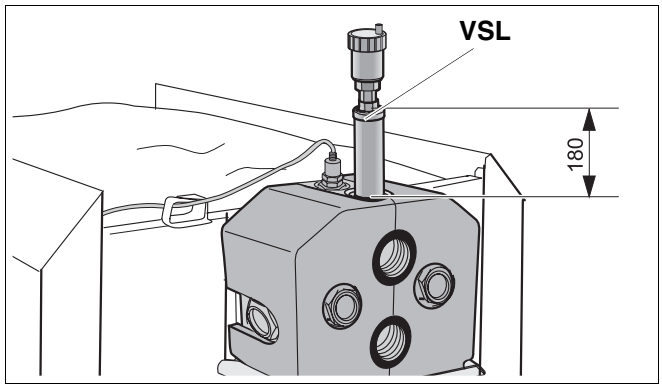

Fig. 56 Connecting the air vent valve to the safety flow

8.2.3 Connecting DHW cylinder

- Connect the DHW cylinder return to connector RS.
- Connect the DHW cylinder flow either at VS1 or VS2.
- Seal off the surplus VS and RS connector.

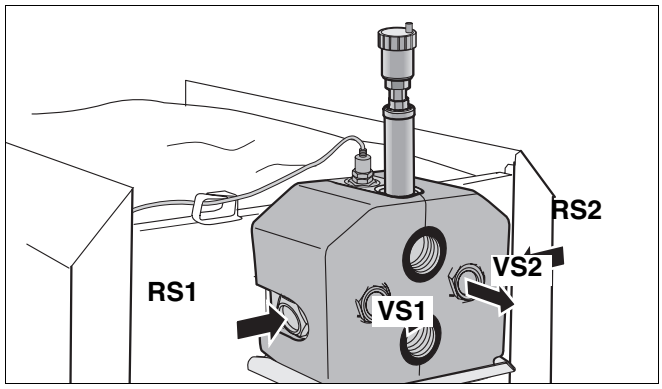

Fig. 57 Connecting DHW cylinder

8.2.4 Installing the boiler fill and drain tap (accessory)

- Seal in the boiler fill and drain valve on connector EL.

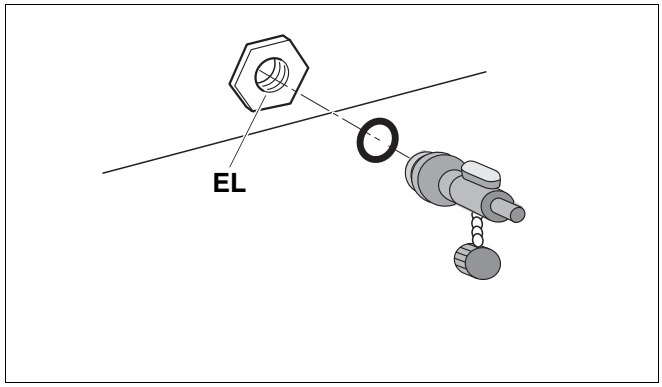

Fig. 58 Installing boiler fill and drain tap

8.3 Filling the heating system and checking for leaks

Before taking the heating system into use, check it for soundness to avoid leaks occurring during operation. Pressurise the heating system to 1.3 x permissible operating pressure (observe the safety pressure of the safety vale).

CAUTION!

SYSTEM DAMAGE

through overpressure during leak testing. Pressure, control and safety equipment may be damaged through excessive pressure.

- When you carry out a leak test, make sure that no pressure, control or safety equipment is fitted which cannot be isolated from the boiler water chamber.

- Close the pressure expansion vessel against the system by closing the cap valve.
- Check the connections and pipework for leaks.
- Open the mixing and shut-off valves on the hot water (primary) side.
- Connect the hose to the mains water tap. Push a hose filled with water onto the hose ferrule of the boiler fill & drain valve and open the valve.
- Open the cap of the automatic air vent by one full turn to allow air to escape.
- Slowly fill the heating system. Observe the pressure gauge whilst filling.
- Close the water tap and the boiler fill & drain valve once the required operating pressure has been reached.
- Bleed the system via the radiator bleed valves.
- Top up with water if the pressure drops as a result of bleeding the system.
- Take the hose off the boiler fill and drain valve.

CAUTION!

SYSTEM DAMAGE

through water shortage.

The boiler needs a pressure switch to protect it against water shortage. You can obtain this as an accessory.

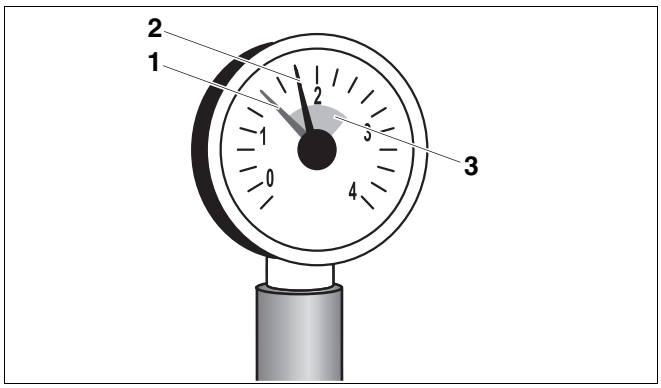

Fig. 59 Pressure gauge for sealed systems

1 *Red needle*
2 *Pressure gauge needle*
3 *Green field*

8.4 Providing a mains electrical supply



WARNING!

RISK TO LIFE

from electric shock.

- Only qualified electricians are permitted to carry out electrical work.
- Before you open the control device: Isolate all poles of the mains power supply and secure against unauthorised re-connection.
- Please observe all installation instructions.

8.4.1 Fitting the control panel

- Locate the push-in hooks of the control device in the slots.
- Push the control device towards the burner door.
- Push the control device down until the locking tabs click into place in the openings.

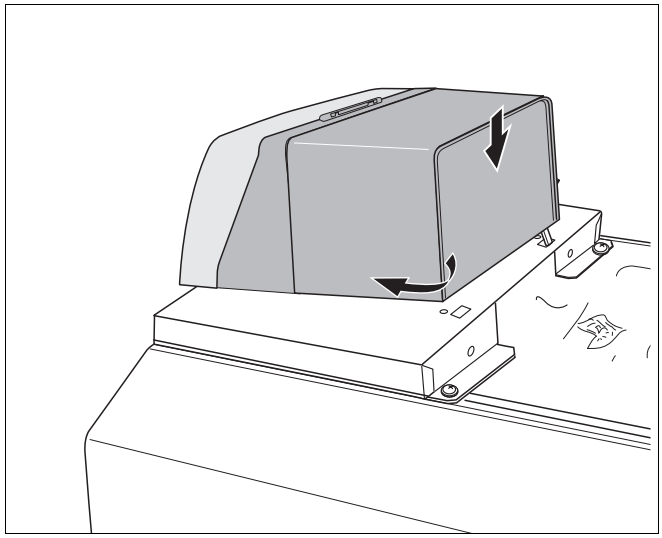

Fig. 60 Fitting control panel

8.4.2 Mains power supply and connection of additional components

- Undo the two screws on the control panel cover and remove the cover.

Create a permanent mains power connection in accordance with local regulations.



WARNING!

RISK OF FIRE

Hot components may damage electrical cables and leads.

- Ensure that all cables/leads are routed in the cableways provided; alternatively on top of the lagging of the boiler.

- Route all cables through the cable entries to the control device and connect in accordance with the wiring diagram.

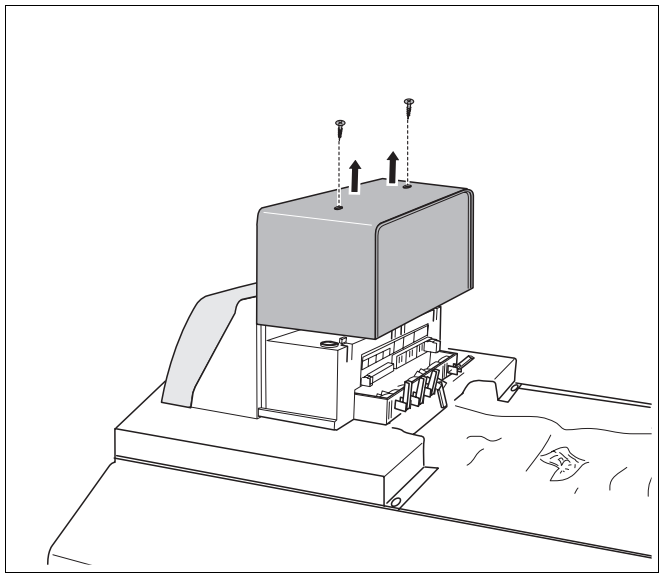

Fig. 61 Removing cover

8.4.3 Strain relief

Secure all cable runs with cable clips (standard control device delivery):

- Insert the cable clips together with the cable from the top into the slots in the frame (step 1).
- Push the cable clip down (step 2).
- Push against the clip (step 3).
- Flick the toggle up (step 4).

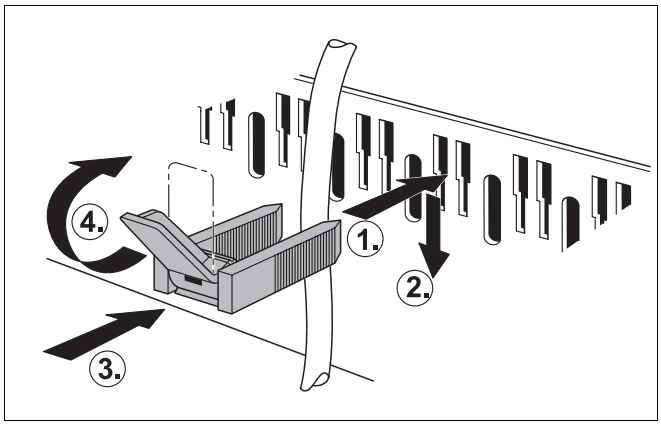

Fig. 62 Securing cables with a cable clip

8.5 Installing casing parts

- Push the control panel cover down into the guide rails.
- Tighten two screws to secure control panel cover.
- Slide the tabs of the rear boiler cover under the front boiler cover.
- Lower the rear boiler cover onto the side panels.

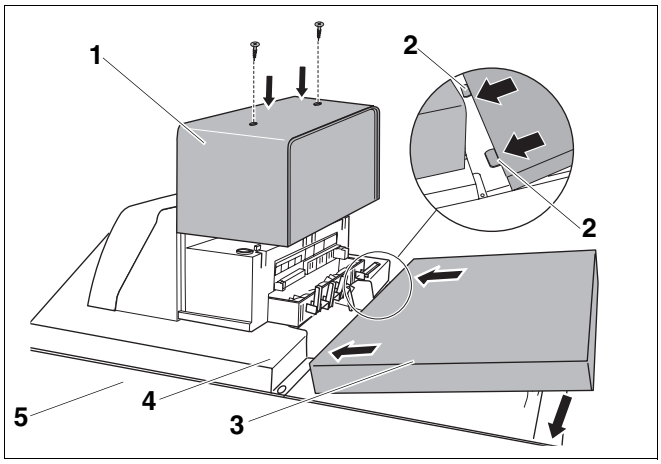

Fig. 63 Fitting hoods

1 *Control device cover*
2 *Tabs*
3 *Rear boiler casing bracket*
4 *Front boiler cover*
5 *Side panel*

- Place end hood on rear boiler cover and fasten with two screws.

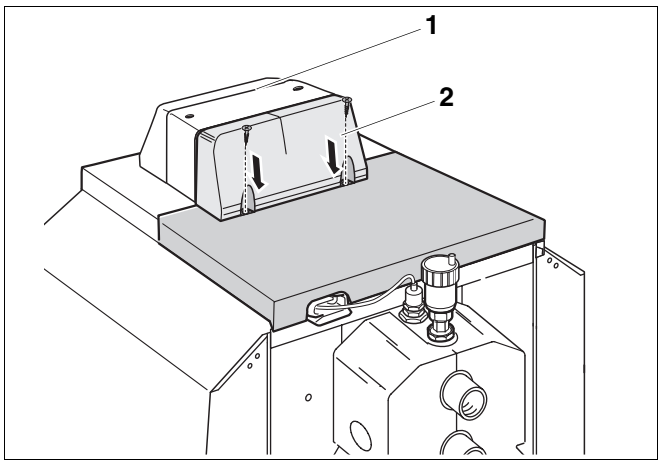

Fig. 64 Fitting the end hood

1 *Control device cover*
2 *End hood*

9 Commissioning the heating system

This chapter details the commissioning independent of the installed control device.

- Complete the commissioning report during the commissioning procedure (➔ Chapter 9.8, page 43).

For further conditions and requirements regarding boiler rooms as well as the combustion air supply and flue pipes and also operation see (➔ Chapter 3, page 7).

CAUTION!

BOILER DAMAGE

through excessive dust and airborne seed.

- Do not operate the boiler under very dusty conditions, e.g. caused by building work inside the boiler room.
- Install an air filter if the air supply is very dusty (e.g. because of unmade roads and paths or dusty working environments, such as quarries, mines etc.) or laden with airborne seed from composite blossom.

9.1 Creating operating pressure

Create the operating pressure required before commissioning.

CAUTION!

SYSTEM DAMAGE

through stress in materials as a result of temperature differences.

- Only fill the system when cold (the flow temperature should be no more than 40 °C).

- Adjust the red pointer of the pressure gauge to the required operating pressure, i.e. at least 1 bar (applicable to sealed systems).
- Top up the heating water or drain via the boiler fill and drain tap until the required operating pressure has been reached (➔ Chapter 8.3, page 36).
- Bleed the heating system during filling.

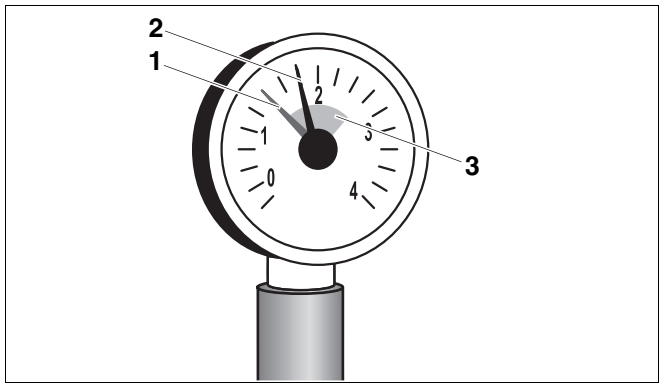

Fig. 65 Pressure gauge for sealed systems

1 *Red needle*

2 *Pressure gauge needle*

3 *Green field*

9.2 Making the heating system operational

- Open the fuel supply to the main fuel shut-off valve.
- Switch ON the heating system emergency stop switch (if installed) and/or the appropriate domestic mains fuse.

9.3 Switching on the heating system

- Set the rotary selector for maximum boiler temperature and the DHW set value rotary selector to 0.

This ensures that the burner does not start yet (no heat demand).

- Set the ON/OFF switch on the base controller to position "1".

The entire heating system is switched ON. During commissioning, the display briefly shows a flashing "-" before showing fault message "6Y". The fault message "6Y" is displayed because the burner is delivered in a fault state.

- Wait approx. one minute to enable the EMS connection to the room programming unit to be established.
- Press the "Reset" button on the BC10. The status display on the BC10 illuminates and the display shows the current boiler water temperature in °C.

Adjust the date and time on the room programming unit if fault message "A11" appears. Only then will the current boiler water temperature be displayed.

Before continuing with the commissioning, enter the correct parameters on the room programming unit. In particular the DHW configuration (DHW circulation pump with three-way valve or heating circuit pump and cylinder loading pump) must be adjusted correctly to safeguard the correct function of the heating system. Carefully read the respective chapters in the ➔ installation and service instructions for the room programming unit.

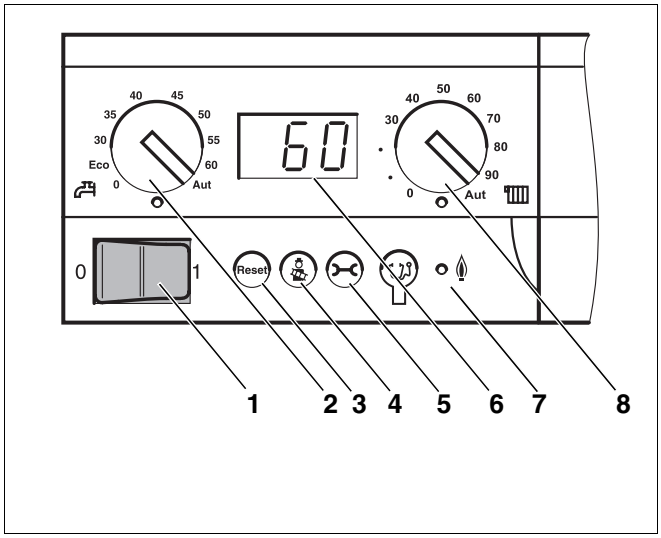

Fig. 66 Logamatic BC10 base controller

1 *ON/OFF switch*
2 *DHW set value rotary selector*
3 *"Reset" button*
4 *"Chimney sweep" button for flue gas test and manual mode*
5 *"Status display" button*
6 *Display*
7 *Burner (ON/OFF) LED*
8 *Rotary selector for maximum boiler temperature during heating mode*

9.4 Starting up the burner

For further commissioning steps, follow the sequence of burner commissioning. Refer to the ➔ burner documentation.

9.5 Raising the flue gas temperature

For the set flue gas temperature for the boiler, see the Specifications (➔ Chapter 3, page 7).

If you discover when testing that the flue gas temperature is too low for the chimney (risk of condensation), the temperature can be raised in one of the following ways:

– Remove hot gas baffle plates
– Remove the hot gas check plate

- Shut down the heating system (➔ Chapter 10.1, page 44).

CAUTION!

RISK OF BURNING

through touching hot boiler parts.

- Wear appropriate protective gloves or use pliers.

9.5.1 Removing the hot gas baffle plates

You can remove the hot gas baffles in pairs to raise the flue gas temperature.

- Open the burner door; to do this, remove the two lateral hexagon bolts.
- Remove the hot gas baffles towards the front.
- Close the burner door with both hexagon bolts. Tighten the hexagon bolts evenly to properly seal the burner door.
- Re-check the flue gas temperature.

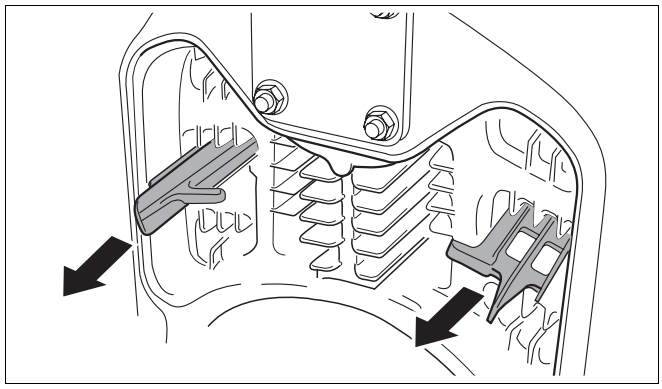

Fig. 67 Removing hot gas baffle plates (example: hot gas flue 2)

9.5.2 Removing the hot gas check plate

You can remove the hot gas check plate to further raise the flue gas temperature if, after the removal of the hot gas baffle plates, the flue gas temperature is still too low.

- Open the burner door; to do this, remove the two lateral hexagon bolts.
- Remove the hot gas check plate; to do this remove the screw.
- Re-check the flue gas temperature.

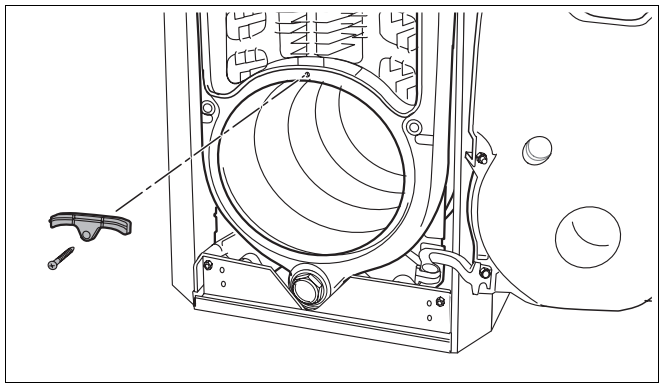

Fig. 68 Removing the hot gas check plate

9.6 Installing the burner hood

- Hook the burner hood into the hooks of the boiler shell.
- Secure the burner hood with screws.



WARNING!

RISK TO LIFE

from electric shock.

- Only operate the boiler with the burner hood fitted.

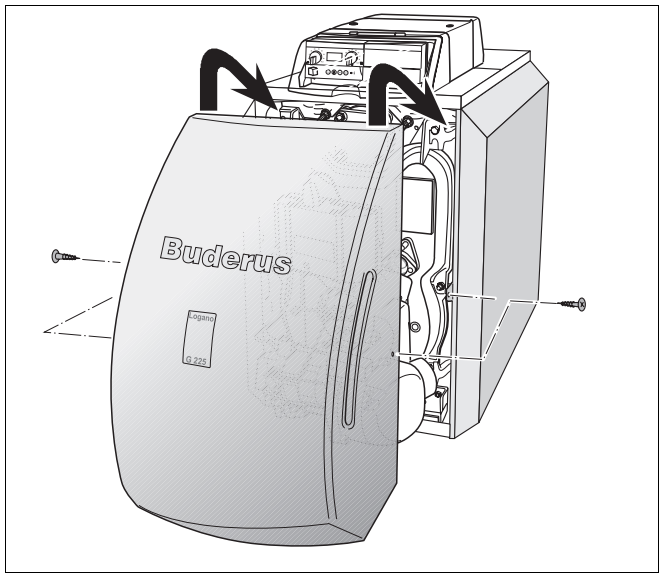

Fig. 69 Installing the burner hood

9.7 Setting the room programming unit/control panel

- Check/make following settings on the room programming unit:

– Automatic operating mode
– Required room temperature
– Required DHW temperature
– Required heating program

USER NOTE

- Operating instructions, for example how to set temperatures, can be found in the ➔ room programming unit documentation.

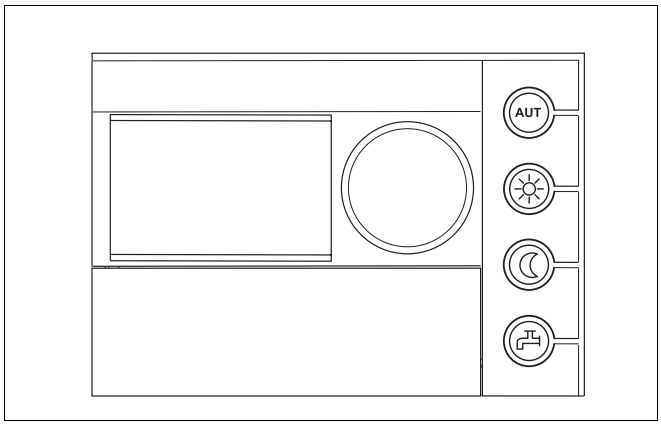

Fig. 70 Room programming unit

After completion of the commissioning steps

- Set both rotary selectors on the control panel to "AUT" (automatic mode). In this setting, the room programming unit takes over control.

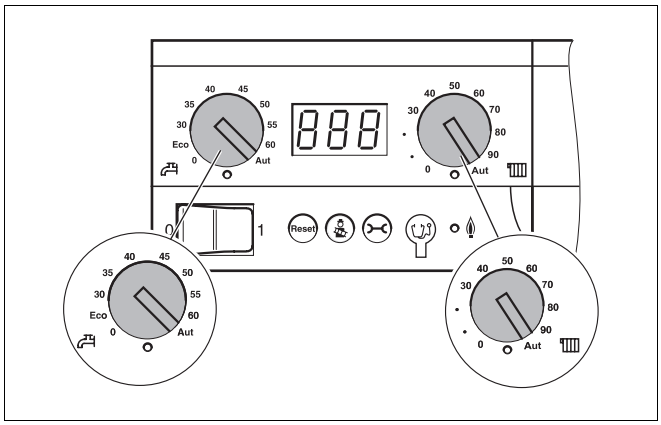

Fig. 71 Setting the control panel

9.8 Commissioning report

- Sign off all commissioning work as completed and enter the relevant date.

Commissioning steps	Page	Actual values	Comments
1. Fill heating system and check all connections for leaks	36	☐ _____ bar	
2. Create operating pressure – Adjust the green field on the pressure gauge – Bleed the heating system – Adjust the expansion vessel inlet pressure (➔ see the expansion vessel documentation)	39	☐ _____ bar	
3. Check the combustion air supply and the flue gas routing		☐	
4. Start up the control device (➔ see the control device documentation)	40	☐	
5. Start up the burner (➔ see the burner documentation)	40	☐	
6. Check the flue gas temperature, and raise if required	40	☐ _____ °C	
7. Match the control device settings to the customer's requirements (➔ control device documentation)		☐	
8. Provide the system user with information and hand over all relevant technical documentation		☐	
Confirm correct commissioning Company stamp/signature/date			

USER NOTE

- Inform your customer of the correct fuel type and enter it into the table (➔ boiler operating instructions).

10 Shutting down the heating system

10.1 Standard shutdown

- Switch the ON/OFF switch on the control device OFF (position "0"). This switches the boiler and all its components OFF (for example the burner).
- Close the main fuel shut-off valve.



CAUTION!

SYSTEM DAMAGE

through frost.

The heating system can freeze up in cold weather if it has been switched off.

- Leave the heating system switched ON for as long as possible.
- Protect your heating system against freezing by draining the heating system and DHW pipework at the lowest possible point.

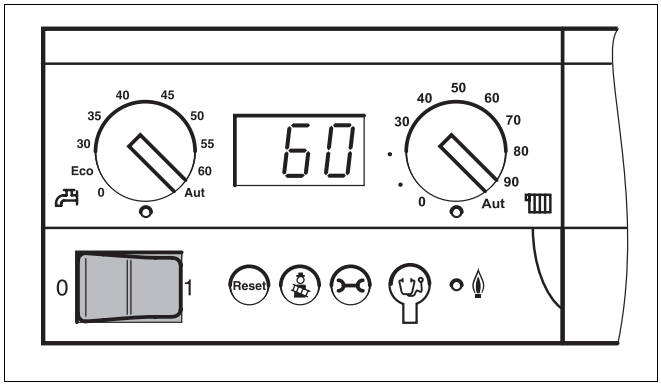

Fig. 72 Switching off the heating system

10.2 Emergency measures

Explain to your customer the measures required in emergencies, for example during fire i.e.:

- Close the main fuel shut-off valve.
- Isolate the heating system from the mains power supply using the heating system emergency stop switch or the corresponding domestic fuse.

11 Heating system inspection and maintenance

11.1 Why is regular maintenance important?

Heating systems should be regularly maintained for the following reasons:

– to achieve a high level of efficiency and to operate the system economically (low fuel consumption),
– to achieve a high level of operational reliability,
– to maintain the cleanest possible combustion.

Offer an annual inspection and as-required maintenance contract to your customer. You can check in the inspection and maintenance reports what should be included in such contracts
(➔ Chapter 11.5, page 49).

USER NOTE

You may order spare parts from the spare parts catalogue.

11.2 Preparing the boiler for cleaning

- Shut down the heating system
(➔ Chapter 10.1, page 44).

WARNING!

RISK TO LIFE

from electric shock.

- Before you open the control device: Isolate all poles of the mains power supply and secure against unauthorised re-connection.

- Remove burner hood from boiler.
- Pull the mains supply plug from the SAFe.

USER NOTE

If the burner door was fitted with l.h. closing, you must remove the communication and sensor cable as well as the mains supply plug from the SAFe.

11.3 Cleaning the boiler

The boiler can be cleaned with brushes and/or by a wet method. Cleaning equipment is available as an accessory.

- Open the burner door; to do this, remove the two lateral hexagon bolts.

CAUTION!

RISK OF BURNING

through touching hot boiler parts.

- Wear appropriate protective gloves or use pliers.

11.3.1 Cleaning the boiler with cleaning brushes

- Note the position of the hot gas baffle plates to enable their correct re-installation later.
- Remove the hot gas baffle plates from the hot gas flues.
- Clean the hot gas baffle plates using one of the two cleaning brushes.

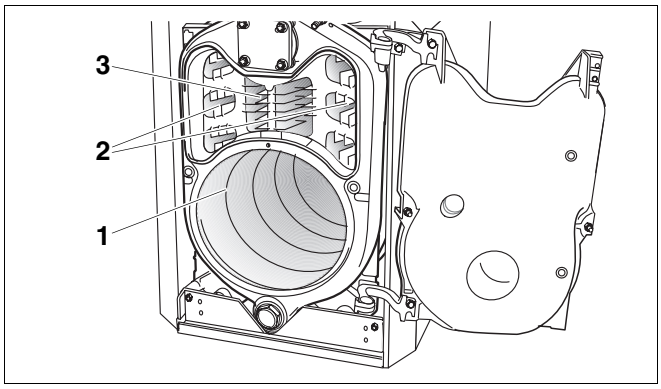

Fig. 73 Opening the burner door

1 *Combustion chamber*

2 *2. Hot gas flue*

3 *3. Hot gas flue*

- Clean the hot gas flues by rotating the round cleaning brush.

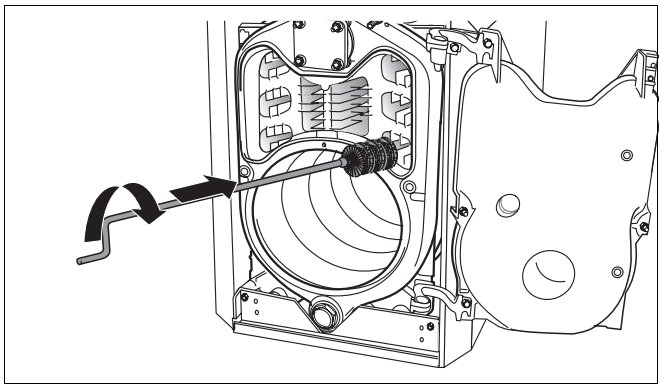

Fig. 74 Brushing out the hot gas flues

- Clean the combustion chamber with a flat brush. Remove all loose combustion residues from the combustion chamber, the hot gas flues and the flue outlet.
- Install the hot gas baffle plates in their original position.
- Check the packing cord on the burner door. Replace damaged or hardened packing cord.

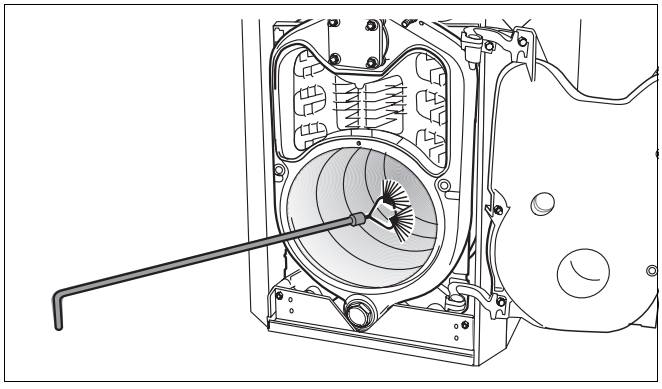

Fig. 75 Brushing out the combustion chamber

USER NOTE

You can obtain suitable packing cord from your local Buderus sales office.

- Close the burner door with both hexagon bolts. Tighten the hexagon bolts evenly (approx. 10 Nm) to properly seal the burner door.
- Close pressure gauge nozzle for the combustion chamber pressure.
- Attach the mains supply plug to the SAFe.

11.3.2 Wet cleaning (chemical cleaning)

When wet-cleaning, use a cleaning agent appropriate to the level of contamination (soot level and encrusted residues).

Proceed with the wet cleaning in the same order as described for cleaning with brushes
(➔ Chapter 11.3.1, page 46).

USER NOTE

Observe the ➔ operating instructions for the cleaning agent. You may need to proceed differently from the method described here.

- Cover the control device with plastic to prevent spray from entering the control device.
- Spray cleaning agent evenly into the hot gas flues.
- Close the burner door, plug the burner plug and mains supply plug into the SAFe and start the heating system.
- Heat the boiler water temperature to at least 70 °C.
- Shut down the heating system and let it cool down.
- Brush out the hot gas flues.

11.4 Checking the heating system operating pressure

On sealed systems the pressure gauge marker must be within the green field.

Ensure that the red pressure gauge needle is set to the required operating pressure.

USER NOTE

- Set the overpressure to at least 1 bar.

- Check the heating system operating pressure.

The operating pressure is too low if the pressure gauge needle indicates below the green field. In this case, top up with water.

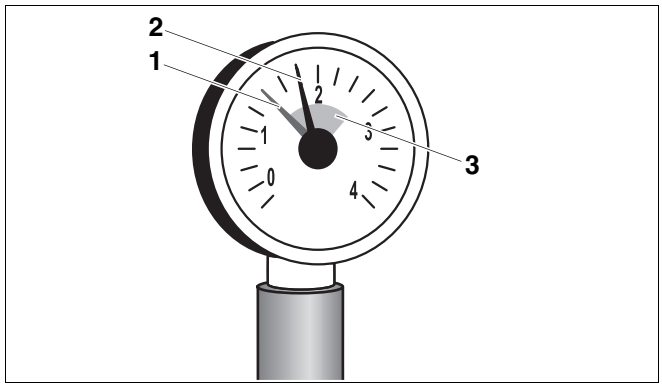

Fig. 76 Pressure gauge for sealed systems

1 *Red needle*

2 *Pressure gauge needle*

3 *Green field*



CAUTION!

SYSTEM DAMAGE

through frequent topping up.

The heating system may be damaged, depending on water quality, by corrosion or scaling if you frequently need to top up the water.

- Ensure that your heating system is bled properly.
- Check the heating system for leaks and the correct operation of the expansion vessel.



CAUTION!

SYSTEM DAMAGE

through stress in materials as a result of temperature differences.

- Only fill the system when cold (the flow temperature should be no more than 40 °C).

- Top up with water via the boiler fill & drain valve.
- Vent the heating system.
- Recheck the operating pressure.

11.5 Inspection and maintenance reports

- Sign off all inspection work as completed and enter the relevant date.

The inspection and maintenance reports are also designed as templates.

	Inspection work	Page	Date: _____	Date: _____	Date: _____
1.	Check the general condition of the heating system		☐	☐	☐
2.	Visual and functional check of the heating system		☐	☐	☐
3.	Check all the gas and water components of the system for: – Leaks during operation – Leak test – Visible signs of corrosion – Signs of ageing		☐	☐	☐
4.	Check the combustion chamber and the heating surface for contamination; shut down the system for this step	45	☐	☐	☐
5.	Check the burner (➔ burner documentation)		☐	☐	☐
6.	Check the combustion air supply and flue gas routing for function and safety		☐	☐	☐
7.	Check the expansion vessel inlet pressure	47	☐	☐	☐
8.	Check the DHW cylinder and sacrificial anode for function (➔ DHW cylinder documentation)		☐	☐	☐
9.	Check the control device settings (➔ control device documentation)		☐	☐	☐
10.	Record the results of the inspection final checks, incl. measurements and test results		☐	☐	☐
	Confirm the professional commissioning		Company stamp/signature	Company stamp/signature	Company stamp/signature

	Date: _____	Date: _____	Date: _____	Date: _____	Date: _____	Date: _____	Date: _____
1.	☐	☐	☐	☐	☐	☐	☐
2.	☐	☐	☐	☐	☐	☐	☐
3.	☐	☐	☐	☐	☐	☐	☐
4.	☐	☐	☐	☐	☐	☐	☐
5.	☐	☐	☐	☐	☐	☐	☐
6.	☐	☐	☐	☐	☐	☐	☐
7.	☐	☐	☐	☐	☐	☐	☐
8.	☐	☐	☐	☐	☐	☐	☐
9.	☐	☐	☐	☐	☐	☐	☐
10.	☐	☐	☐	☐	☐	☐	☐
	Company stamp/signature	Company stamp/signature	Company stamp/signature	Company stamp/signature	Company stamp/signature	Company stamp/signature	Company stamp/signature

USER NOTE

If you identify, during the inspection, that maintenance work is necessary, carry out the work immediately in accordance with requirements.

	As-required maintenance work	Page	Date: _____	Date: _____	Date: _____
1.	Shut down the heating system	44	☐	☐	☐
2.	Remove and clean the hot gas baffle plates	46	☐	☐	☐
3.	Clean the hot gas flues (heating surfaces) and combustion chamber, then re-install the hot gas baffle plates in their original position	46	☐	☐	☐
4.	Check and, if required, replace gaskets/packing cord on the burner door and burner	46	☐	☐	☐
5.	Start up the heating system	39	☐	☐	☐
6.	Final checks of the maintenance work		☐	☐	☐
7.	Check functioning and safety in operation		☐	☐	☐
	Confirm that maintenance was carried out by a properly qualified person		Company stamp/signature	Company stamp/signature	Company stamp/signature

	Date: _____	Date: _____	Date: _____	Date: _____	Date: _____	Date: _____	Date: _____
1.	☐	☐	☐	☐	☐	☐	☐
2.	☐	☐	☐	☐	☐	☐	☐
3.	☐	☐	☐	☐	☐	☐	☐
4.	☐	☐	☐	☐	☐	☐	☐
5.	☐	☐	☐	☐	☐	☐	☐
6.	☐	☐	☐	☐	☐	☐	☐
7.	☐	☐	☐	☐	☐	☐	☐
	Company stamp/signature	Company stamp/signature	Company stamp/signature	Company stamp/signature	Company stamp/signature	Company stamp/signature	Company stamp/signature

12 Troubleshooting

12.1 Recognising and resetting faults

In case of a fault, the relevant fault code will flash on the control panel display. The room programming unit shows faults as plain text messages.

A fault exists if the display flashes and indicates something other than the current boiler water temperature or an operating message.

Example: "6A" = burner does not start

Please refer to the control panel ➔ documentation for an overview of fault and service codes, as well as possible causes and remedial measures.

- Press and hold down the "Reset" button for approx. 5 seconds to clear the fault.

The display shows "rE" whilst the reset is implemented. A reset is only possible if a fault message is flashing.

The fault is cleared when the display shows the standard operating message again. Should the fault recur, repeat the reset two or three times.



CAUTION!

SYSTEM DAMAGE

through frost.

The heating system can freeze up in cold weather if it has been switched OFF through a fault shutdown.

- Immediately rectify the fault and restart the heating system.
- If this is not possible, protect your heating system against freezing by draining the central heating and DHW pipework at the lowest possible point.

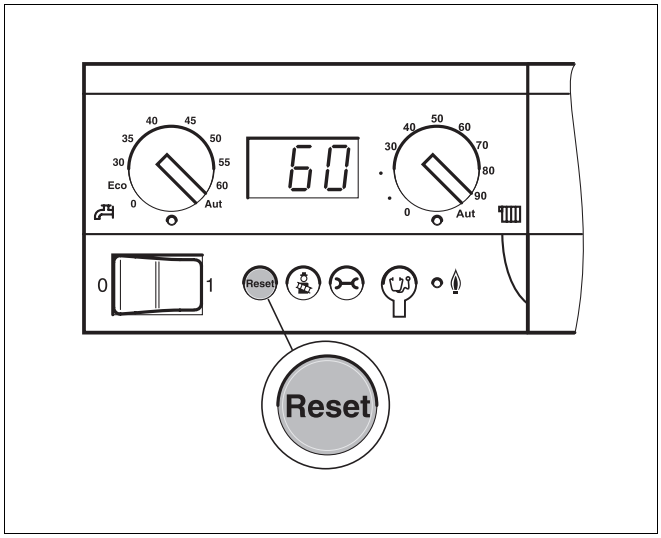

Fig. 77 Clear the fault by pressing the "Reset" button

13 Sensor curves

WARNING!

RISK TO LIFE

from electric shock.

- Isolate the heating system before taking any readings.

Always measure the temperatures being compared (room, flow, outside and flue gas temperatures) near the respective sensor. The curves depict mean values and are subject to tolerances. Check the resistance at the cable ends.

Boiler flow sensor

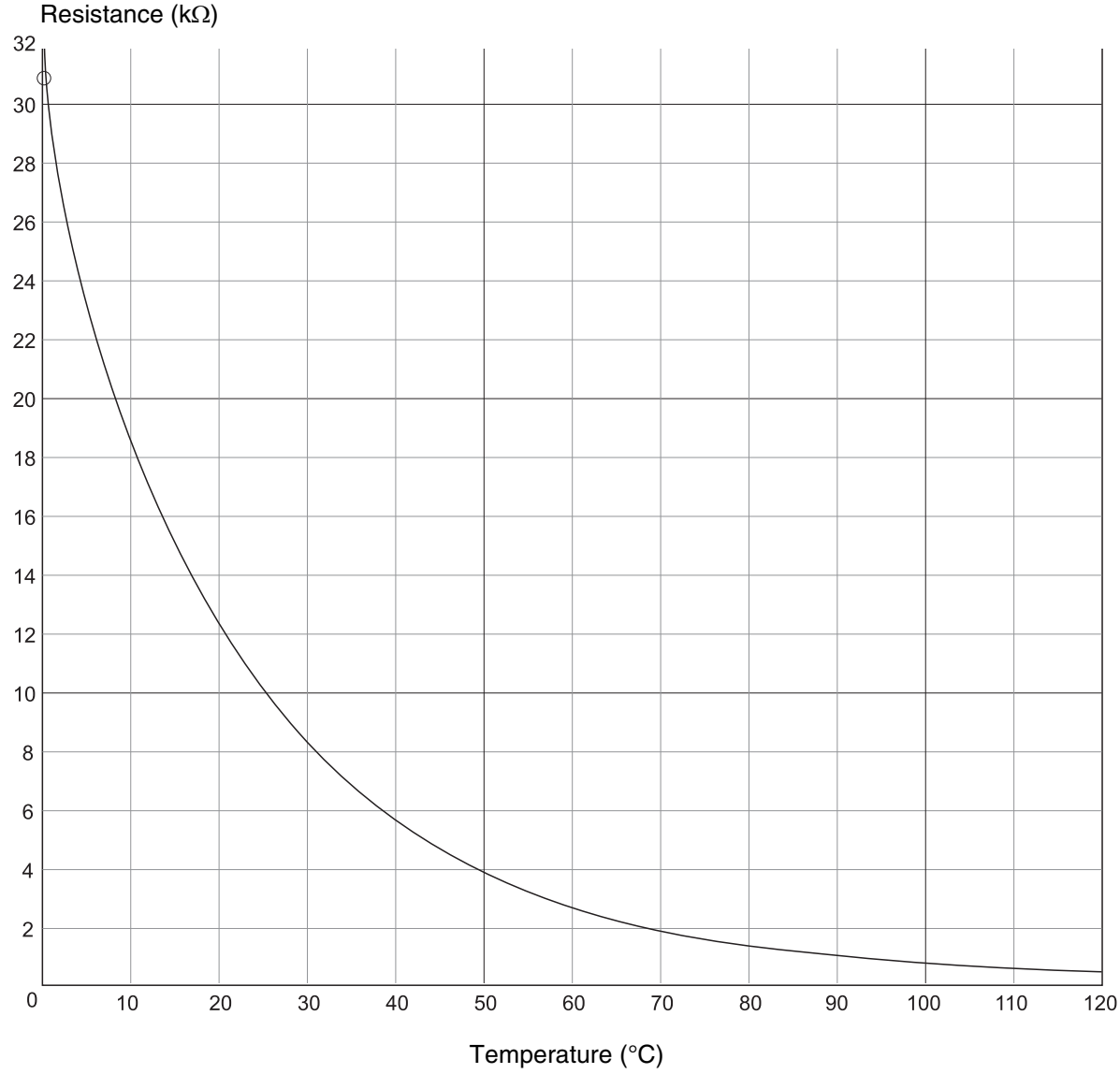

USER NOTE

Two identical so-called dual sensors installed in the sensor housing are used as boiler flow sensors.

14 Index

A
Adjustable feet, fitting 24
Anchor rods 20
B
Boiler block leak test 22
Boiler cover, installing 30
Boiler fill & drain valve 22
Boiler fill and drain tap, installing 35
Boiler hub, closing 22
Boiler output 7
Boiler rating 7
Boiler rear panel 26
Boiler room 4, 8
Boiler sections, assembly 14
Boiler sensor 21, 31
Boiler sensor cable, laying 28
Boiler shell, installing 26
Burner door installation 25
Burner hood, installing 41
C
Cable clips, fitting 28
Cable entry 31
Central heating flow and return, connecting 34
Cleaning 45
Combustion air supply 9
Combustion chamber 46
Commissioning 39
Communication cable, laying 28
Compression tool 17
Connection profile 20, 31, 32
Connections 7
Control panel, fitting 37
D
DHW cylinder, connecting 35
Dirt trap 34
Disposal 5
Draught 7
Dummy flange 22
E
Emergency stop switch – heating system 39
Environmental conditions 8
F
Feed pipe 20
Flow temperature 7
Flue gas temperature 7
Flue gas temperature, raising 40
Flue outlet 22
Flue pipe sealing collar 33
Fuel oil viscosity 9
Fuel, operating conditions 9
H
Heating system, filling 36
Hinge pins 25
Hnge lobes 26
Hot gas baffle plates, inserting 25
Hot gas baffle plates, removing 46
Hot gas flues, cleaning 46
I
Inspection 45
Insulating shells 32
L
Lagging 27
Leaking boiler block 23
Leaks (hot water side) 36
Left-hand closing 25
M
Main shut-off valve 39
Mains power supply voltage 9
Mains power, connecting 37
Mains supply cable, laying 28
Maintenance work 51
Maintenance, as-required 45
O
On-site test pressure 9
Operating pressure, checking 47
Operating pressure, permissible 7
Original parts 4
P
Packing cord, replacing 46
Power supply 9
R
Radiation protection, installing 32
Rated output 7
Report, commissioning 43
Reports, inspection and maintenance 49
S
SAFe 28
Safety flow, connecting 35
Shutting down 44
Side panels 29
Specifications 7
T
Temperature sensor curves 53
Tie-bars, fitting 27
Tools 5
W
Wall clearances 12
Water quality 9
Water, topping up 48
Wet cleaning 47

Buderus

Your local heating contractor:

BBT Thermotechnik GmbH, D-35573 Wetzlar
www.heiztechnik.buderus.de
info@heiztechnik.buderus.de