Installation instructions

Expansion and drain set Logano G215/G225

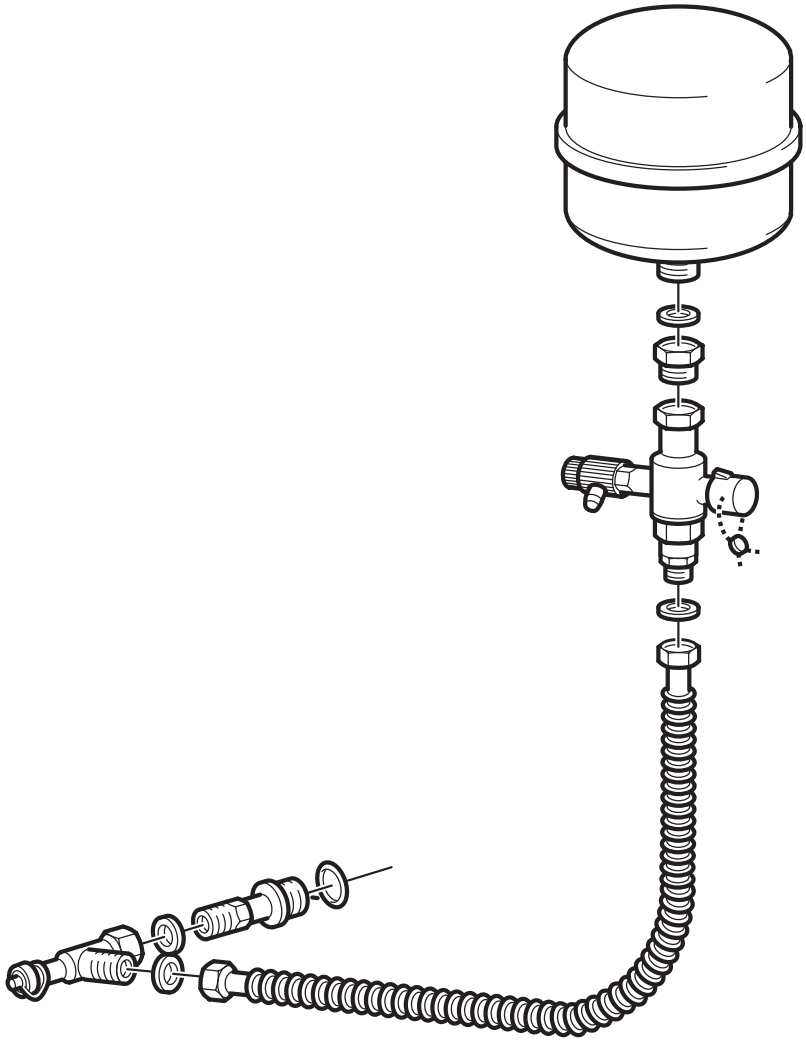

Buderus

Installing the expansion and drain set

Only use original Buderus spare parts. Losses caused by the use of parts not supplied by Buderus are excluded from the Buderus warranty.

USER NOTE

Observe all standards and guidelines applicable to the installation and operation of this heating system in your country.

Correct use

The expansion and drain set is designed to be connected to the Logano G215 and G225 boiler.

Gaskets

The gaskets required during the installation of the components are enclosed in the relevant dispatch unit.

Installing the expansion and drain set

- Insert O-ring (**9**) into the reducer (**8**).
- Screw reducer into the drain connection (EL) (**10**) on the boiler.
- Insert gasket (**7**) into the union nut on the drain valve (**6**) and screw onto the reducer (**8**).
- Insert gasket (**2**) into the union nut on the corrugated metal pipe (**5**) and screw onto the drain valve (**6**).
- Screw adaptor (**3**) and gasket (**2**) onto expansion vessel (**1**) or seal in pipe stub on expansion vessel and screw on adaptor.
- Screw cap valve with union nut (**4**) onto adaptor (**3**).
- Insert gasket (**2**) into the union nut on the corrugated metal pipe (**5**) and screw onto the cap valve (**4**).
- Check that cap valve is fully open.
- Seal protective cap using wire and lead seal (see cap valve installation instructions).
- Check the system for leaks.

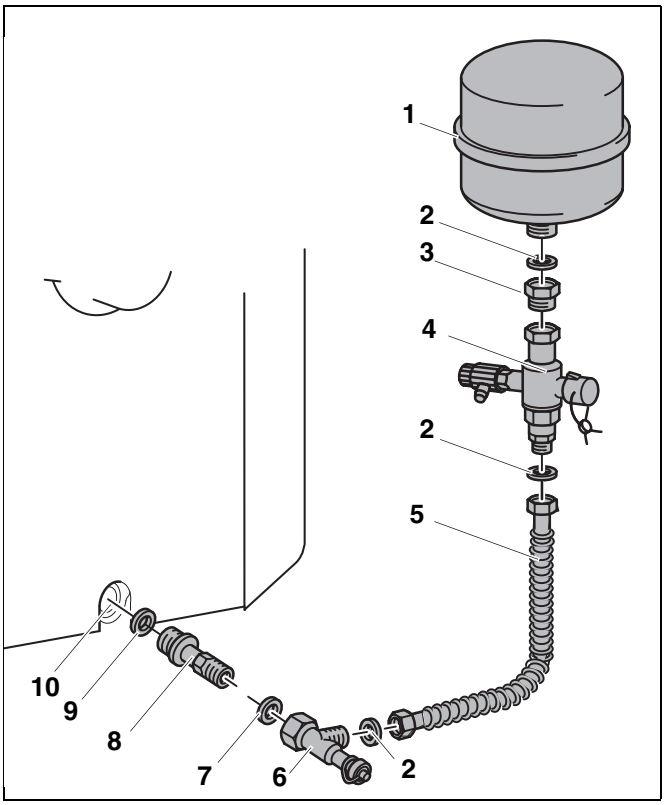

Fig. 1 Installing the expansion and drain set

Item 1: *Expansion vessel (Not contained in scope of supply)*

Item 2: *Gasket Ø 20 x 24 x 2*

Item 3: *Adaptor G 1 x Rp ¾ alternative adaptor G 1 x Rp 1*

Item 4: *Cap valve G 1 x G ¾*

Item 5: *Corrugated metal pipe DN 20*

Item 6: *Drain valve*

Item 7: *Gasket Ø 24 x 30.5 x 2*

Item 8: *Reducer G 1½ x G 1*

Item 9: *O-ring Ø 50 x 3*

Item 10: *Drain connection (EL)*