Installation instructions

Boiler-cylinder connecting pipe
Logano G215/G225
Logalux LT300

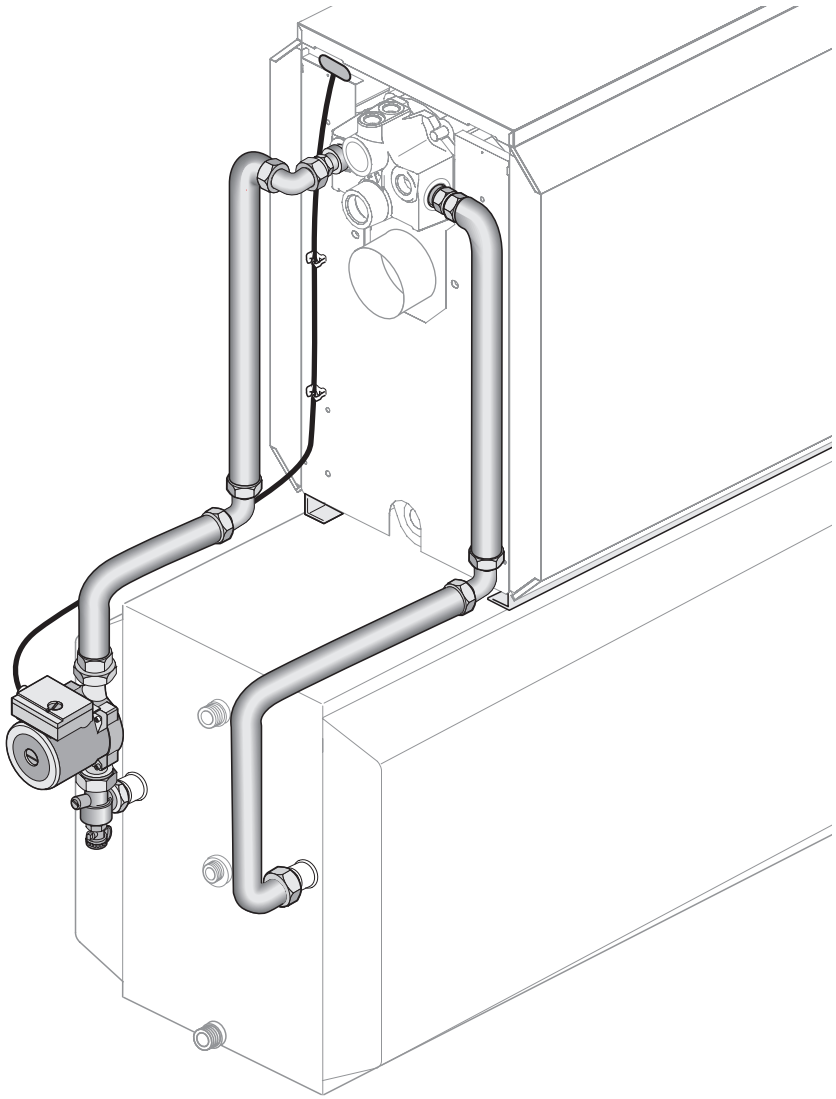

Buderus

Contents

1 Positioning the boiler 3

2 Scope of supply 4

3 Installation 5

3.1 Securing the boiler to the DHW cylinder 5

3.2 Installing the pipe connections 6

3.3 Installing return connection on boiler/cylinder combination 7

3.4 Installing flow connection on boiler/cylinder combination 8

4 Electrical connection 10

5 Filling the system 11

About this manual

This installation manual contains important information for the safe and appropriate installation of the connecting pipes.

These installation instructions are designed for heating contractors who, through their training and experience, are familiar with heating systems.

Only use original Buderus spare parts. Losses caused by the use of parts not supplied by Buderus are excluded from the Buderus warranty.

Correct use

The flexible pipe connection has been designed to connect the Logano G215 and Logano G225 boilers to the Logalux LT300 DHW cylinder.

USER NOTE

Observe all standards and guidelines applicable to the installation and operation of this heating system in your country.

1 Positioning the boiler

SYSTEM DAMAGE

through frost.

CAUTION!

Install the boiler in a room where it is safe from the risk of freezing.

Where possible install the boiler with the recommended wall clearances (Fig. 1). Reducing the minimum clearances makes the boiler more difficult to access.

The base or foundation on which the boiler is to stand must be perfectly flat, level and strong enough to support the weight.

Level DHW cylinder horizontally and vertically.

G225 Rated output [kW]	Measurement A [mm]
45	472
55	352
68	232

USER NOTE

Where applicable, allow extra wall clearances for additional components, for example pipe connections, flue gas silencer or other components on the flue gas side.

Please observe the boiler and cylinder installation and maintenance instructions.

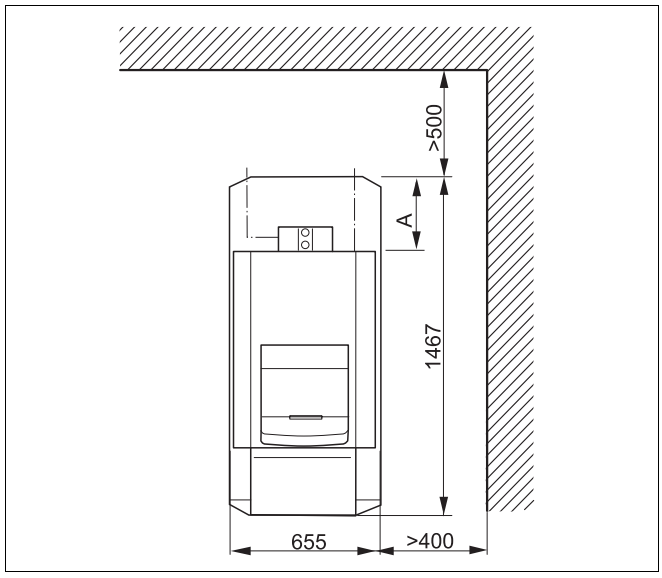

Fig. 1 Wall clearances in the boiler room (general layout)

2 Scope of supply

The cylinder and boiler with control device are installed as described in the installation instructions supplied with the individual products.

CAUTION!

SYSTEM DAMAGE

through leaking connections.

Never lubricate the pre-assembled O-rings.

Ensure the pre-assembled O-rings are not damaged.

Material	Quantity	Fig. 2 Item
Installation instructions	1	
O-ring Ø 35 x 3	2	1
Double nipple G 1 x G 1	2	2
Gasket Ø 24 x 30.5 x 2	7	3
Return pipe (L = 577.5 mm) (vertical)	1	4
Elbow G 1	1	5
Angled compression fitting comprising: union nut, O-ring Ø 26 x 3 and clamping ring (lower part)	2	9
Return pipe bend	1	10
Angled non-return valve	1	11
Gasket Ø 28 x 44 x 2	2	12
Pump with connecting cable	1	13
Flow pipe bend	1	14
Flow pipe (L = 627.5 mm) (vertical)	1	15
Cable clip	2	16

Tab. 1 Scope of supply

Packed separately	Quantity	Fig. 2 Item
Angled rail	2	6
Countersunk screw (M10 x 25)	4	7*
Hexagon bolt (M8 x 25) with nut	2	8*

Tab. 2 Scope of supply of separately packed items

*see Fig. 3, page 5

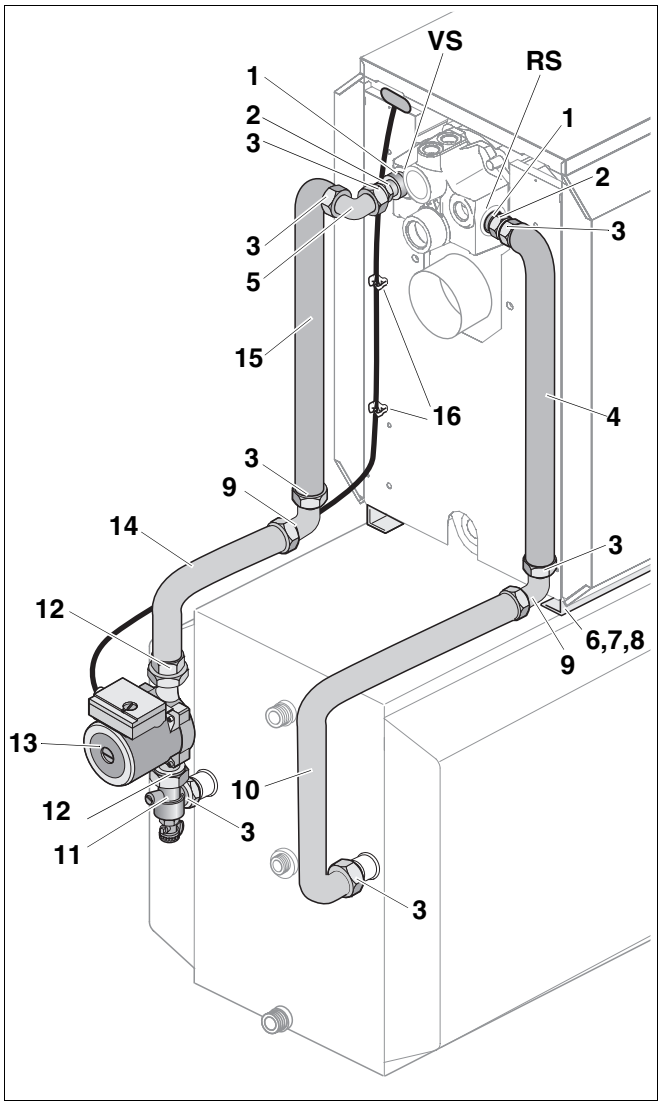

Fig. 2 Scope of supply

3 Installation

SYSTEM DAMAGE

through incorrect installation or operation.

CAUTION!

Please observe the installation, maintenance and operating instructions for the boiler and DHW cylinder.

3.1 Securing the boiler to the DHW cylinder

- Screw angled profile rails (Fig. 3, **Item 1**) onto the top right and left of the DHW cylinder using countersunk screws (Fig. 3, **Item 2**), so that the flattened part of the angled profile rail is pointing to the front (Fig. 3).
- Using a hoist or other suitable tool, place boiler (minus casing) between the angled profile rails onto the DHW cylinder.

RISK OF INJURY

through carrying heavy loads.

CAUTION!

- Use a crane or other suitable lifting device.

- Insert M8 x 25 hexagon bolt (Fig. 3, **Item 3**) through the side hole on the angled profile rail and the slot in the boiler section feet. On the inside, screw on one cogged nut.

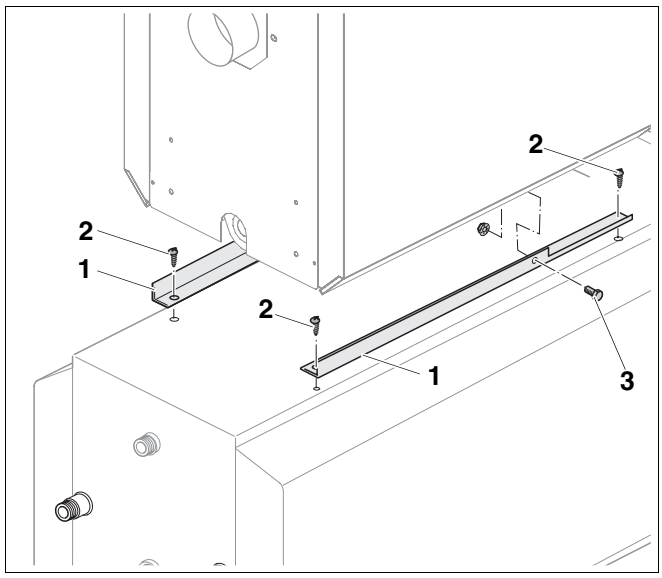

Fig. 3 Fitting to the fastening bracket

Item 1: *Angled profile rails*

Item 2: *Countersunk screw M10 x 25*

Item 3: *Hexagonal bolt M8 x 25 with nut*

- Remove lagging (Fig. 4, **Item 4**) and radiation protection (Fig. 4, **Item 5**) from the connection profile (see boiler installation instructions).
- Fit casing (Fig. 4, **Item 1**) according to the boiler installation instructions.
- Remove plug (Fig. 4, **Item 3**) and gasket (Fig. 4, **Item 2**) from the connection profile.

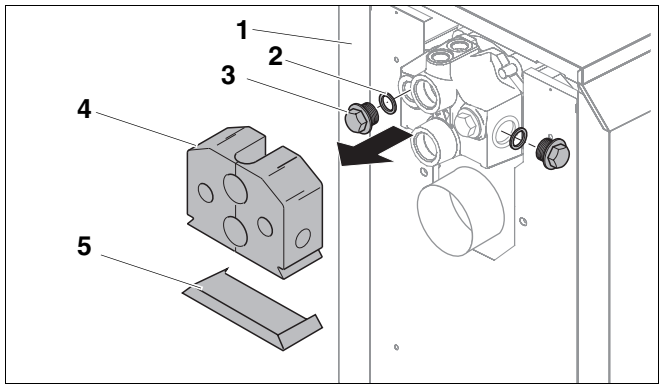

Fig. 4 Removing components from the connection profile

Item 1: *Boiler casing*

Item 2: *Gasket*

Item 3: *Plug*

Item 4: *Lagging*

Item 5: *Radiation protection*

3.2 Installing the pipe connections

USER NOTE

The connections must only be connected to the positions shown in Fig. 5.

SYSTEM DAMAGE

through leaking connections.

CAUTION!

Torque on the union nut:

- Tighten all fittings by hand plus 1/8 turn by spanner (equivalent to 60 Nm).

SYSTEM DAMAGE

through leaking connections.

CAUTION!

Torques on the compression fitting:

- Tighten all fittings by hand plus 1¼ turns by spanner (equivalent to a torque of 60 Nm to max. 80 Nm).

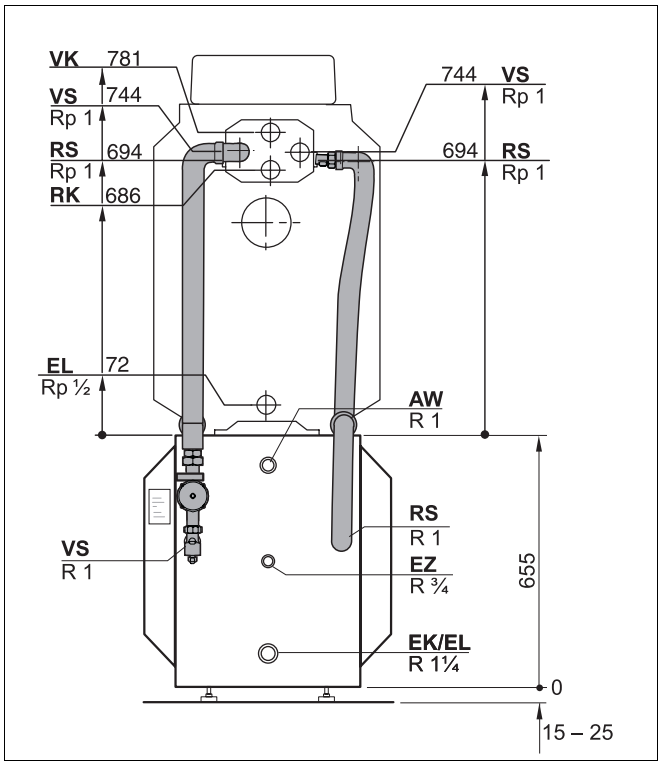

Fig. 5 Boiler and DHW cylinder connections

- Before installing the pipe connections, check pipe connector on the DHW cylinder for possible damage.

USER NOTE

If one of the fittings is loose, a new gasket should be inserted before tightening again.

AW = Domestic hot water outlet
EK = Cold water inlet
EL = Drain
EZ = DHW circulation inlet
RS = DHW cylinder return
VS = DHW cylinder flow
RK = Boiler return
VK = Boiler flow

3.3 Installing return connection on boiler/cylinder combination

- Insert O-ring (Fig. 6, **Item 1**) into the groove on the double nipple (Fig. 6, **Item 2**) and screw the double nipple into the boiler return (Fig. 6).
- Insert gasket (Fig. 6, **Item 3**) into the union nut on the short leg of the return pipe (Fig. 6, **Item 4**) and fasten loosely to the double nipple.
- Insert gasket (Fig. 6, **Item 3**) into the union nut on the angled compression fitting (Fig. 6, **Item 5**) and fasten to the return pipe.

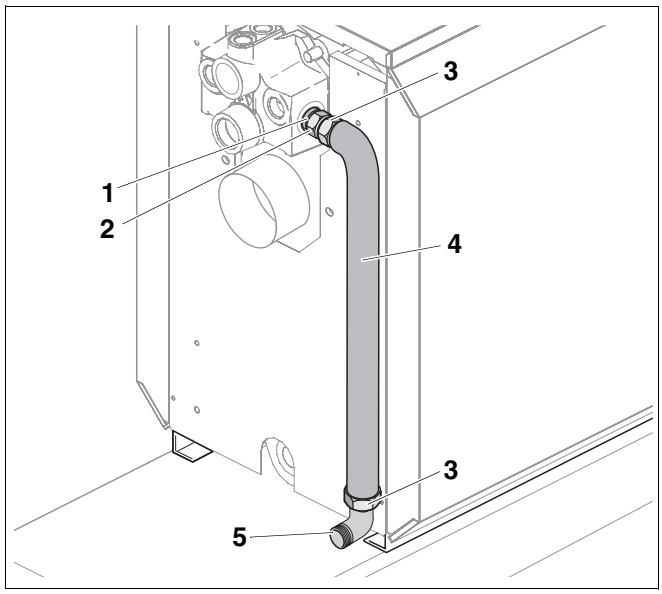

Fig. 6 Fitting the return connection to the boiler

Item 1: *O-ring Ø 35 x 3*

Item 2: *Double nipple G 1*

Item 3: *Position of gasket Ø 24 x 30.5 x 2*

Item 4: *Return pipe (L = 577.5 mm)*

Item 5: *Angled compression fitting*

- Cut the return pipe bend (Fig. 7, **Item 1**) to length according to Tab. 3.

G225 Rated output [kW]	Return pipe bend length [mm]
40	Do not cut to length
45	120
55	240
68	360

Tab. 3 Return pipe bend lengths

- Loosely screw return pipe bend (Fig. 7, **Item 1**) with gasket (Fig. 7, **Item 2**) inserted onto the cylinder return pipe stub.
- Push union nut (Fig. 7, **Item 6**), clamping ring (Fig. 7, **Item 5**) and O-ring (Ø 26 x 3; Fig. 7, **Item 4**) onto the horizontal pipe.
- Push on the clamping ring (Fig. 7, **Item 5**) with the chamfered side facing the union nut (see detail in Fig. 7).
- Push the return pipe bend into the angled compression fitting (Fig. 7, **Item 3**).
- Tighten the union nuts on the angled compression fitting and the cylinder return pipe stub. When tightening, firmly counterhold the angled compression fitting against the housing.
- Tighten all fittings.

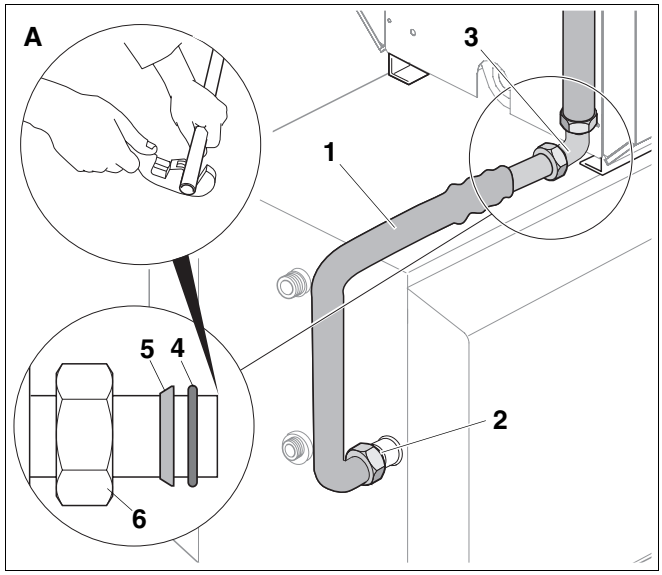

Fig. 7 Installing return connection on the DHW cylinder

Item 1: *Return pipe bend*

Item 2: *Gasket Ø 24 x 30.5 x 2*

Item 3: *Angled compression fitting comprising:*

Item 4*: O-ring Ø 26 x 3*

Item 5*: Clamping ring*

Item 6*: Union nut*

3.4 Installing flow connection on boiler/cylinder combination

- Insert O-ring (Fig. 8, **Item 1**) into the groove on the double nipple (Fig. 8, **Item 2**) and screw the double nipple into the cylinder flow.
- Insert gasket (Fig. 8, **Item 3**) into the union nut on the elbow (Fig. 8, **Item 4**) and fasten to the double nipple.
- Insert gasket (Fig. 8, **Item 3**) into the union nut on the short leg of the flow pipe (Fig. 8, **Item 5**) and screw loosely onto the elbow (Fig. 8, **Item 4**).
- Insert gasket (Fig. 8, **Item 3**) into the union nut on the angled compression fitting (Fig. 8, **Item 6**) and screw loosely onto the return pipe.

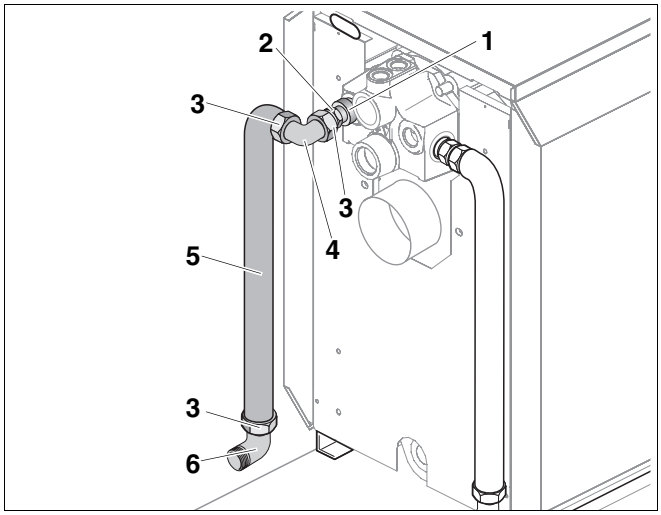

Fig. 8 Fitting the flow connection to the boiler

Item 1: *O-ring Ø 35 x 3*

Item 2: *Double nipple G 1*

Item 3: *Gasket Ø 24 x 30.5 x 2*

Item 4: *Elbow G 1*

Item 5: *Flow pipe (L = 627.5 mm)*

Item 6: *Angled compression fitting*

- Insert gasket (Fig. 9, **Item 1**) into the union nut on the angled non-return valve (Fig. 9, **Item 2**) and screw onto cylinder flow.
- Insert gasket (Fig. 9, **Item 3**) for the pump into the other union nut on the angled non-return valve (Fig. 9, **Item 2**) and screw cylinder DHW pump (Fig. 9, **Item 4**) with downwards flow direction onto the angled non-return valve.

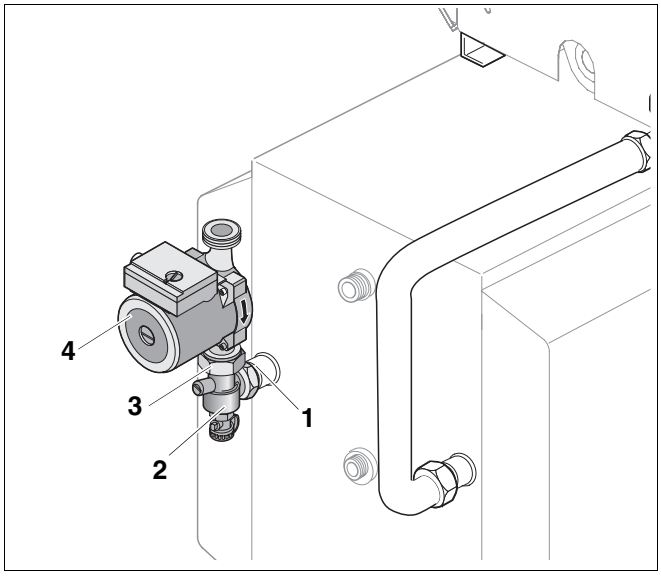

Fig. 9 Installing flow connection on the DHW cylinder

Item 1: *Gasket Ø 24 x 30.5 x 2*

Item 2: *Angled non-return valve*

Item 3: *Gasket Ø 44 x 28 x 2*

Item 4: *Cylinder DHW pump*

- Cut the flow pipe bend (Fig. 10, **Item 3**) to length according to Tab. 4.

G225 Rated output [kW]	Flow pipe bend length [mm]
45	120
55	240
68	360

Tab. 4 Flow pipe bend lengths

- Loosely screw flow pipe bend (Fig. 10, **Item 3**) with gasket (Fig. 10, **Item 1**) inserted onto the DHW cylinder loading pump inlet.
- Push union nut (Fig. 10, **Item 7**), clamping ring (Fig. 10, **Item 6**) and O-ring (Ø 26 x 3; Fig. 10, **Item 5**) onto the horizontal pipe.
- Push on the clamping ring (Fig. 10, **Item 6**) with the chamfered side facing the union nut (Fig. 10, **Item 7**) (see detail in Fig. 10).
- Push the flow pipe bend into the angled compression fitting (Fig. 10, **Item 4**).
- Tighten the union nuts on the angled compression fitting and the cylinder return pipe stub. When tightening, firmly counterhold the angled compression fitting against the housing.
- Tighten all fittings.

CAUTION!

SYSTEM DAMAGE

through leaking connections.

Torque:

- Tighten all fittings (observe the user note in Chapter 3.2), and check for leaks.

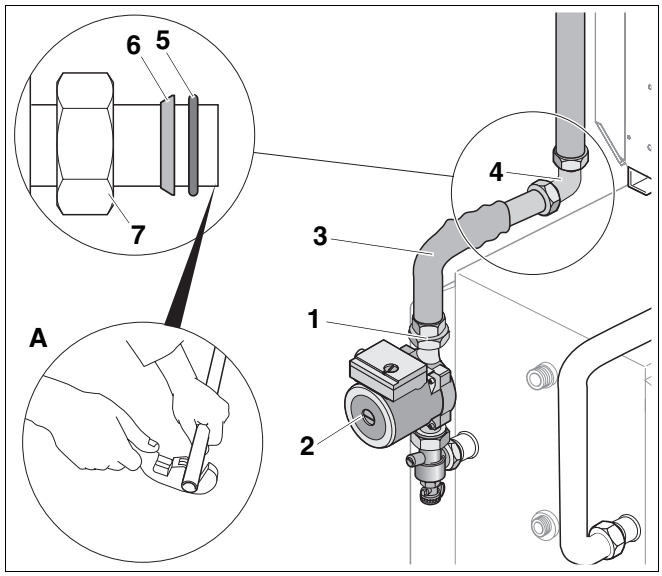

Fig. 10 Installing flow connection on the DHW cylinder

Item 1: *Gasket Ø 44 x 28 x 2*

Item 2: *Cylinder DHW pump*

Item 3: *Flow pipe bend*

Item 4: *Angled compression fitting comprising:*

Item 5*: O-ring Ø 26 x 3*

Item 6*: Clamping ring*

Item 7*: Union nut*

4 Electrical connection

- Carefully lay DHW temperature sensor cable and pump cable (see boiler/cylinder installation instructions).

RISK TO LIFE

from electric shock.

WARNING!

- Ensure that the electrical cable is not touching any hot parts.

- Electrical connections to be made according to the wiring diagram (see wiring diagram with control device).

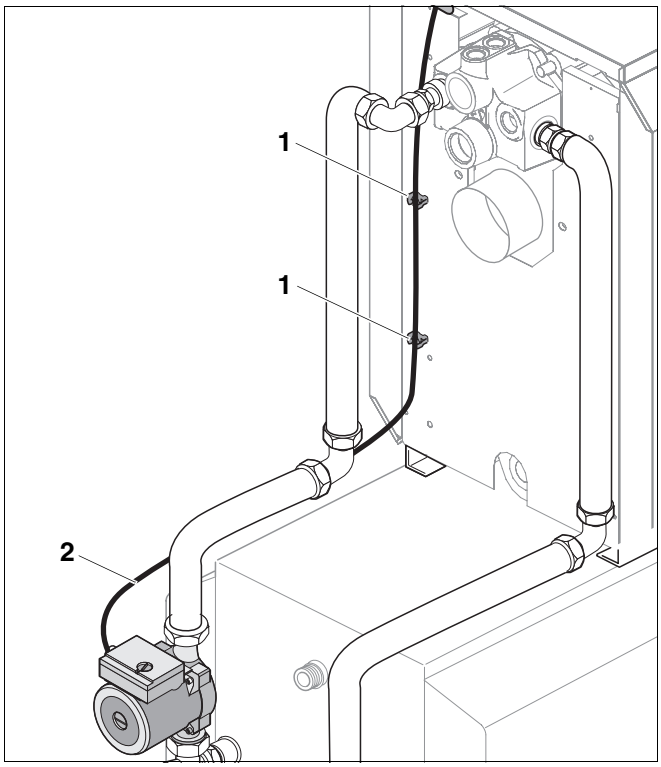

Fig. 11 Electrical connection

Item 1: *Cable clip*

Item 2: *Electric cable from cylinder loading pump*

5 Filling the system

- Open all valves in the heating circuit flow and return.
- Set the slotted screw (Fig. 12, **Item 2**) on the angled non-return valve (Fig. 12, **Item 3**) to the vertical position (always open).
- Unscrew cover (Fig. 12, **Item 5**) of filling valve (Fig. 12, **Item 4**), screw on filling hose and set the filling valve toggle (Fig. 12, **Item 1**) to the vertical position (open).
- Slowly fill system via filling valve (Fig. 12, **Item 4**).
- Set the slotted screw (Fig. 12, **Item 2**) on the angled non-return valve to the horizontal position (operating state).
- Continue to fill system via filling valve (Fig. 12, **Item 4**).
- Once the system is full, close the filling valve (Fig. 12, **Item 4**).
- Set the cylinder loading pump to its highest level and start it.
- Carefully vent the heating pipe once more and top up with water if necessary.
- Unscrew the filling hose.

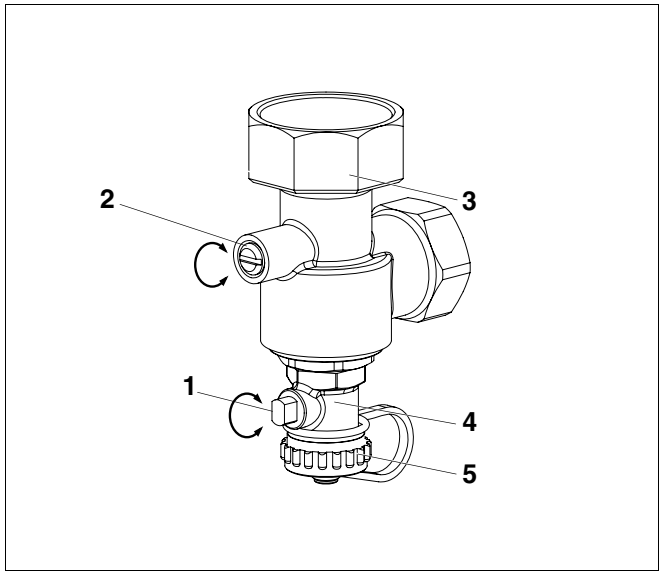

Fig. 12 Angled non-return valve

Item 1: *Toggle*

Item 2: *Adjusting screw*

Item 3: *Angled non-return valve*

Item 4: *Filling valve*

Item 5: *Cover*

Emptying the cylinder heating pipe

CAUTION!

SYSTEM DAMAGE

through frost.

Please note that the heating pipe on the DHW cylinder does not empty completely when emptying the system in the normal fashion. Therefore, protect against frost or extract the remaining water from the heating pipe by blowing or sucking it out.

Your local heating contractor:

Buderus

BBT Thermotechnik GmbH, D-35573 Wetzlar
www.heiztechnik.buderus.de
info@heiztechnik.buderus.de