Installation instructions

KAS 1 heating circuit quick assembly set Logano G225

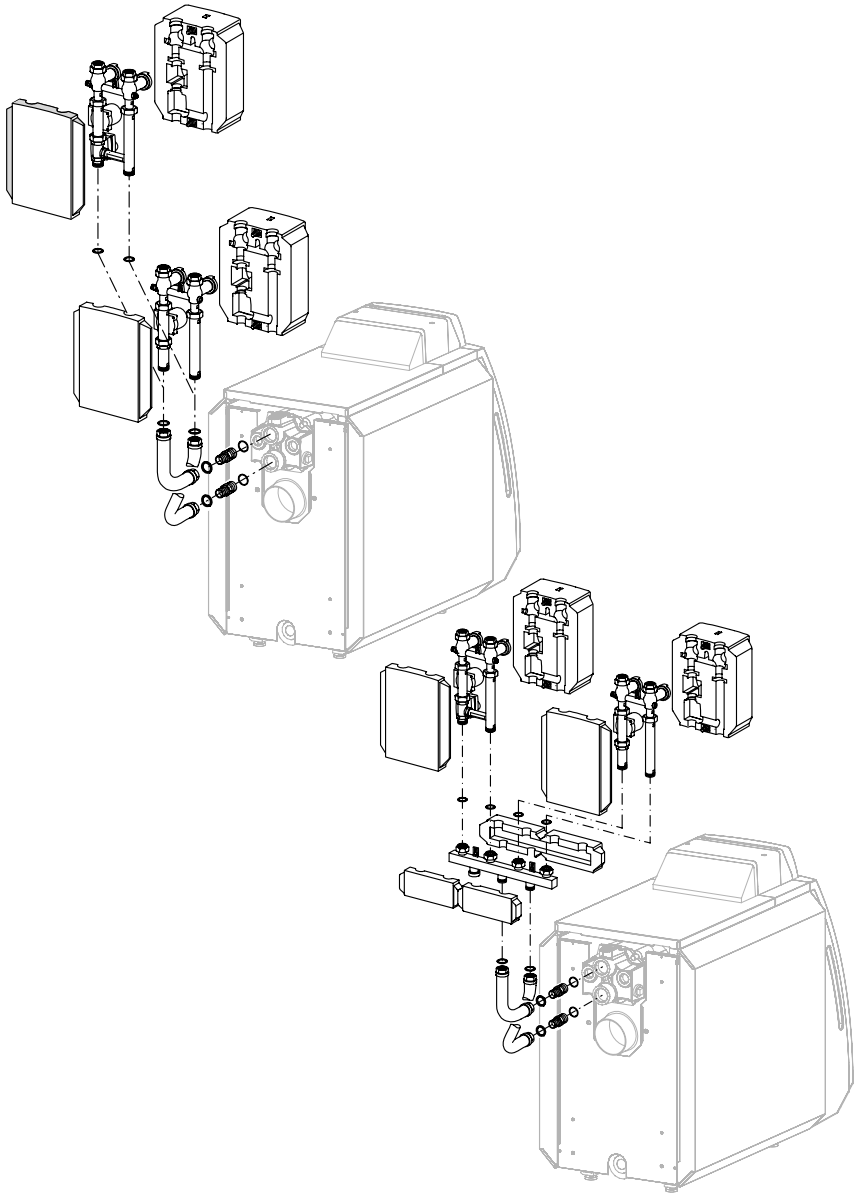

Buderus

Contents

1 Note 3

2 Specification and scope of supply 4

2.1 Connection options and installation dimensions 4

2.2 Scope of supply 5

3 Boiler connection set KAS 1 with heating circuit set HS/HSM 6

3.1 Boiler connection set KAS 1 7

3.2 Heating circuit set HS/HSM 7

4 Boiler connection set KAS 1 with heating circuit distributor HKV 2 8

4.1 Boiler connection set KAS 1 9

4.2 Heating circuit distributor HKV 2 with HS/HSM 9

5 Electrical connection 10

About this manual

This installation manual contains important information for the safe and appropriate installation of the KAS 1 heating circuit quick assembly set.

These installation instructions are designed for heating contractors who, through their training and experience, are familiar with heating systems.

Only use original Buderus spare parts. Losses caused by the use of parts not supplied by Buderus are excluded from the Buderus warranty.

Correct use

The KAS 1 heating circuit quick assembly set ensures a correct and space-saving fitting to the relevant heating system.



USER NOTE

Observe all standards and guidelines applicable to the installation and operation of this heating system in your country.

1 Note

Gaskets

The gaskets required during the installation of the components are enclosed in the relevant dispatch unit.

Electrical connection

All electrical connections must be carried out according to the wiring diagram. The electrical leads must not touch any hot boiler parts. Local regulations must be observed.

Self-regulating pumps

Please observe the operating and service instructions for the control device if using self-regulating pumps.

Leak test

Before attaching the insulation shells, carry out a leak test on the system to identify any possible leaks.

Lagging

The simplest way to join the insulation shells is to put them inside each other first at the top, then to press them together at the bottom. The insulation shells of the HS/HSM must also be screwed together (not too tight!) using the plastic screws.

CAUTION!

SYSTEM DAMAGE

The vent holes in the lagging must not be covered, as they are there to keep the heating circuit pump cool.

Connection to the pipework

Connect to the heating circuit sets using normal 1" male thread connector for HS 25 and 1¼" male thread connector for HS 32. If using soldered parts, do not solder them to the connection sets as doing so may damage the gaskets.

Filling and venting the system

To fill the system better, the non-return valve in the boiler flow can be opened manually. To do this, turn the slotted screw (Fig. 1, **Item 2**) on the non-return valve into a vertical position. Make sure that the ball valves (Fig. 1, **Item 1**) in the flow (Fig. 1, **Item 4**) and return (Fig. 1, **Item 3**) are open.

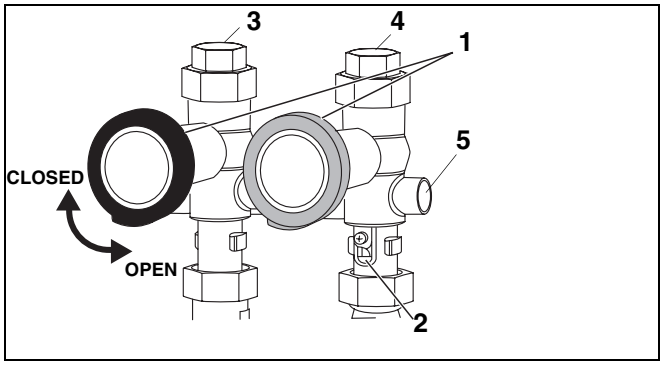

Fig. 1 Flow and return

Item 1: *Ball valves*

Item 2: *Slotted screw*

Item 3: *Return (blue handle)*

Item 4: *Flow (red handle)*

Item 5: *Sensor well*

USER NOTE

After filling and venting, the slotted screw must be turned back to its horizontal position.
(Operating position ⊖ "Z")

If the heating circuit has a mixer (HSM), the flow sensor for the controlled heating circuit must be inserted into the sensor well (Fig. 1, **Item 5**).

Mixer – manual mode

- Loosen the plastic screws in the HSM lagging.
- Remove the front part of the lagging.
- Set the desired temperature by pressing and turning the button on the mixer motor.

Refer to the operating instructions when operating the control device in manual mode.

2 Specification and scope of supply

2.1 Connection options and installation dimensions

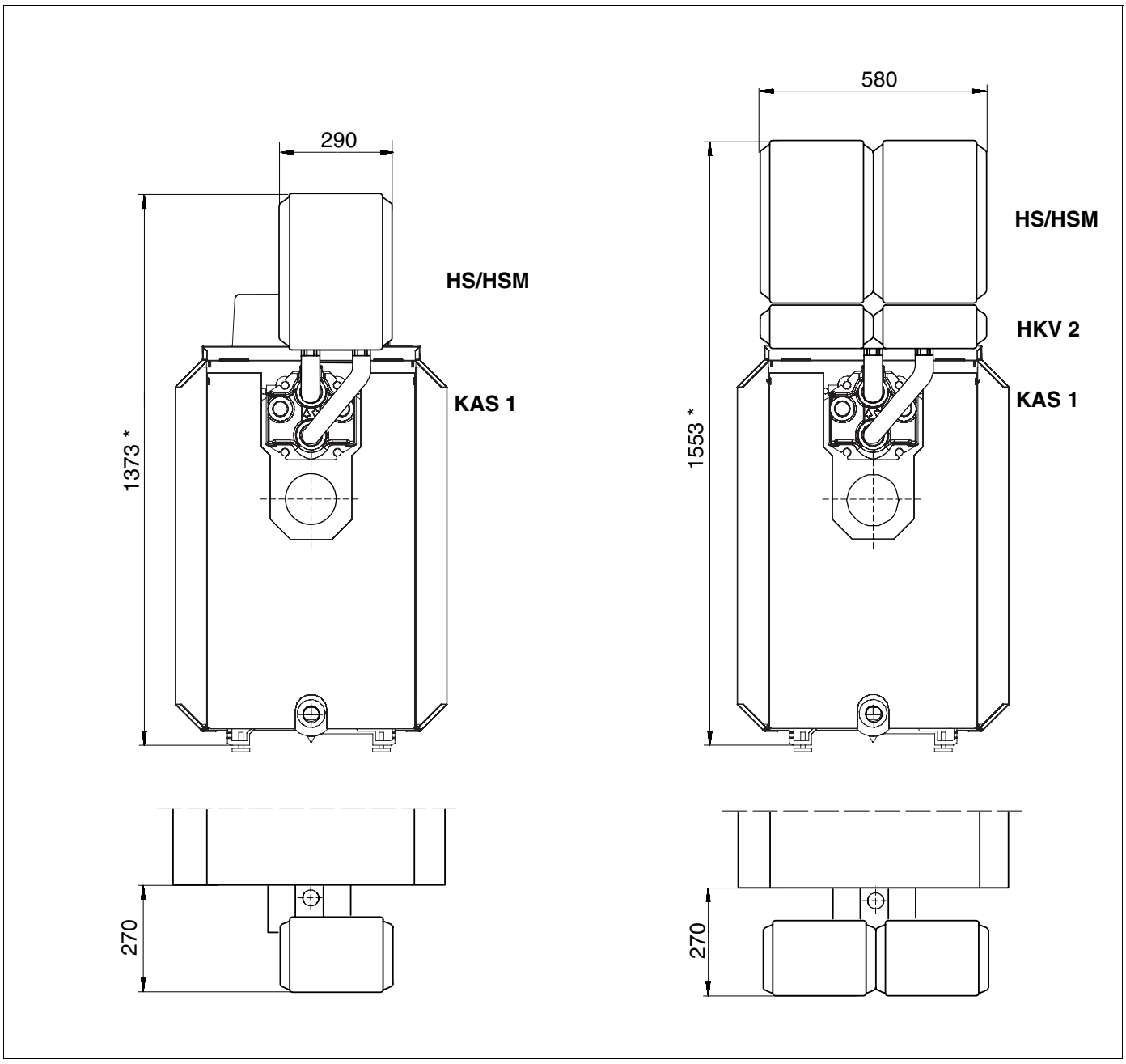

Fig. 2 Installation dimensions for KAS 1 with HS or HSM and KAS 1 with HKV 2
** Measurements with adjustable feet approx. 15–25 mm higher*

2.2 Scope of supply

Item 1: *O-ring Ø 44 × 3*

Item 2: *Reducer G 1½ × G 1¼*

Item 3: *Gasket Ø 32 × 44 × 2*

Item 4: *Return pipe G 1½*

Item 5: *Flow pipe G 1½*

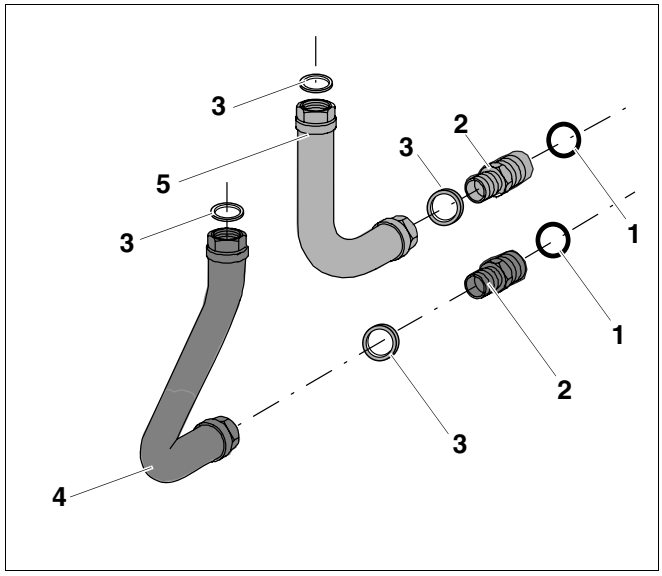

Fig. 3 Scope of supply

3 Boiler connection set KAS 1 with heating circuit set HS/HSM

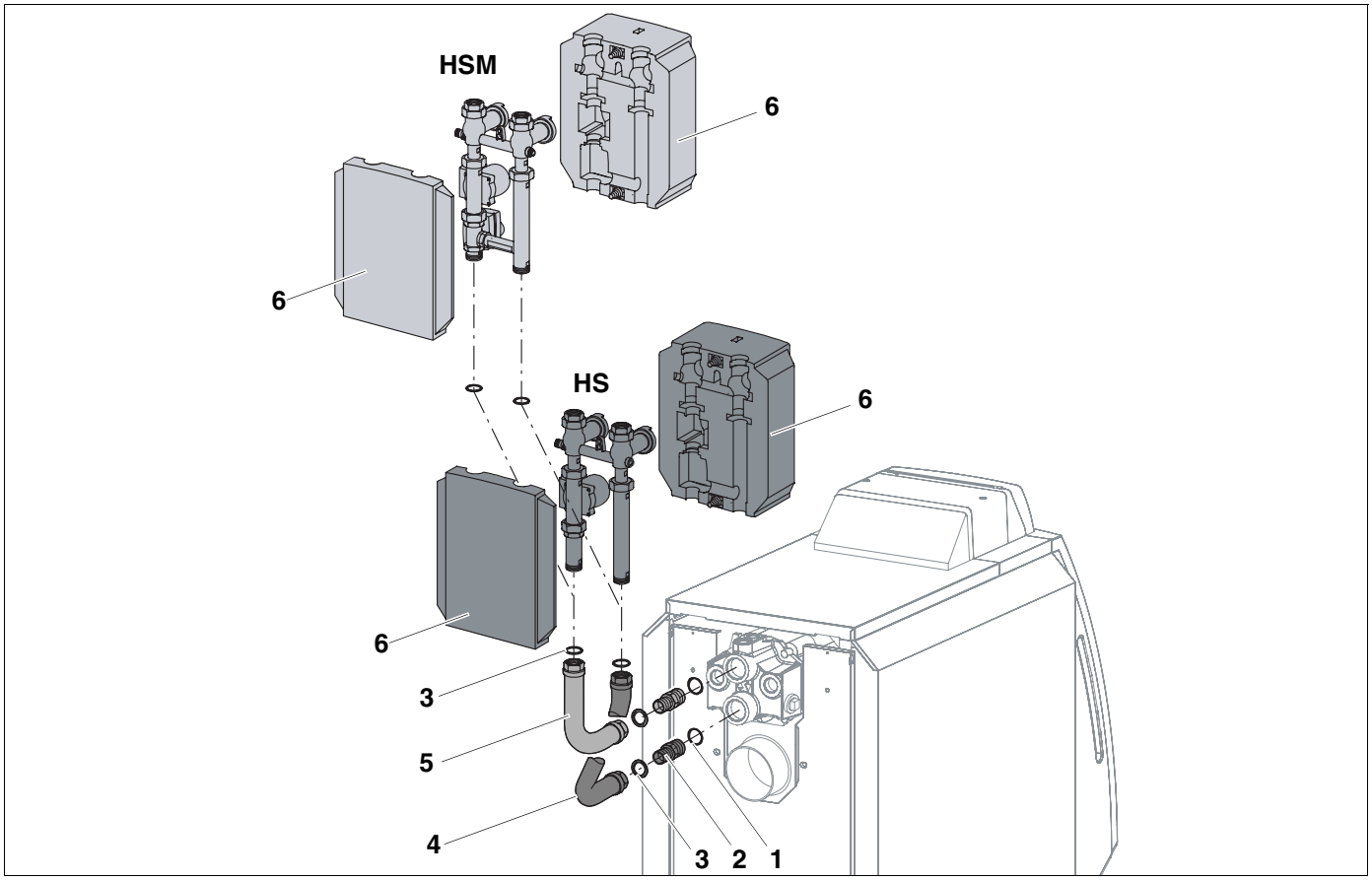

Fig. 4 Rear installation KAS 1

Item 1: *O-ring Ø 44 × 3*

Item 2: *Reducer G 1½ × G 1¼*

Item 3: *Gasket Ø 32 × 44 × 2*

Item 4: *Return pipe G 1½*

Item 5: *Flow pipe G 1½*

Item 6: *Insulation shells*

USER NOTE

The boiler connection set KAS 1 can be installed with heating circuit set HS (without mixer) and HSM (with mixer).

3.1 Boiler connection set KAS 1

- Screw reducer (**2**) with inserted O-ring (**1**) onto the boiler flow and return.
- Insert gaskets (**3**) into the union nuts on the short leg of the return pipe (**4**) and screw loosely onto the reducer (**2**).
- Insert gaskets (**3**) into the union nuts on the short leg of the flow pipe (**5**) and screw loosely onto the reducer (**2**).
- Position the long leg of the flow and return pipes vertically.
- Tighten fittings between reducer and flow pipe and between reducer and return pipe.

3.2 Heating circuit set HS/HSM

- Insert gaskets (**3**) in the upper fittings on the vertical pipe sections and screw HS or HSM Fig. 4 into KAS 1.
- Check the system for leaks.
- Push insulation shells (**6**) from both sides onto the relevant heating circuit set and screw loosely in place using the plastic screw.

4 Boiler connection set KAS 1 with heating circuit distributor HKV 2

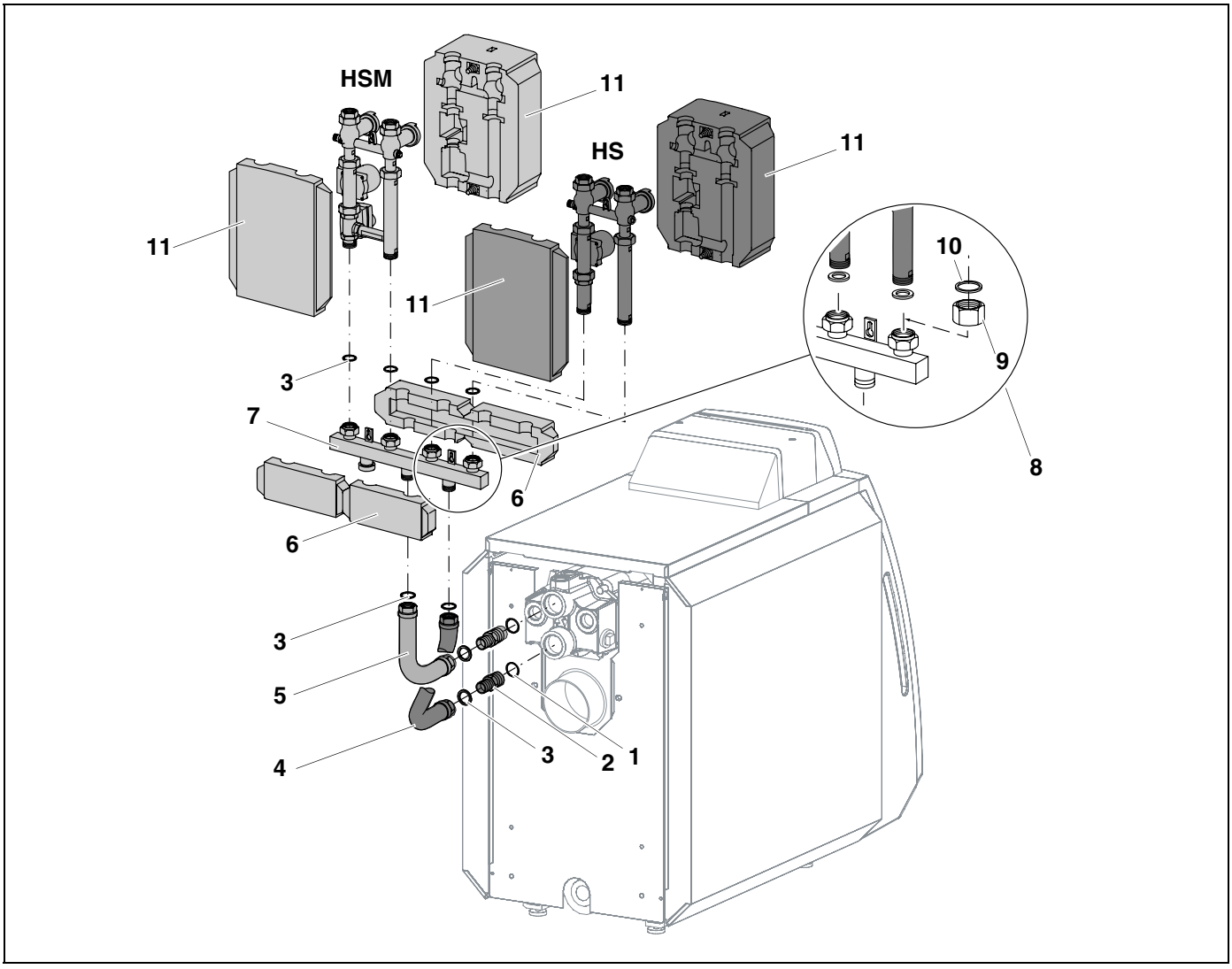

Fig. 5 Rear installation KAS 1 with heating circuit distributor

Item 1: *O-ring Ø 44 × 3*

Item 2: *Reducer G 1½ × G 1¼*

Item 3: *Gasket Ø 32 × 44 × 2*

Item 4: *Return pipe G 1½*

Item 5: *Flow pipe G 1½*

Item 6: *Insulation shells*

Item 7: *Heating circuit distributor HKV 2 (available as option)*

Item 8: *Top-up set ES0 (consists of 2 × Items 9/10) (available as option)*

Item 9: *Reducer union nut G 1½ × G 1¼*

Item 10: *Gasket Ø 28 × 44 × 2 (EPDM)*

Item 11: *Insulation shells*

USER NOTE

The boiler connection set KAS 1 can be installed with either heating circuit set HS (without mixer) or HSM (with mixer).

4.1 Boiler connection set KAS 1

- Screw reducer (**2**) with inserted O-ring (**1**) onto the boiler flow and return.
- Insert gaskets (**3**) into the union nuts on the short leg of the return pipe (**4**) and screw loosely onto the reducer (**2**).
- Insert gaskets (**3**) into the union nuts on the short leg of the flow pipe (**5**) and screw loosely onto the reducer (**2**).
- Position the long leg of the flow and return pipes vertically.
- Tighten fittings between reducer and flow pipe and between reducer and return pipe.

4.2 Heating circuit distributor HKV 2 with HS/HSM

- Insert gaskets (**3**) into the union nuts of KAS 1 and screw HKV 2 and KAS 1 together.

Please note:

The bottom flow connection on the heating circuit distributor (**7**) is in the middle.
If the heating circuit distributor (**7**) is not connected accordingly, it will not function properly as the flow and return will be interchanged.

- Insert gaskets (**3**) into the heating circuit distributor (**7**).
- If using an HS 25 or HSM 25, replace the union nuts and gaskets with the reducer union nuts (**9**) and gaskets (**10**) contained in the ES0 (**8**).
- Place heating circuit set without mixer HS or with mixer HSM onto the heating circuit distributor (**7**) and tighten the fittings.
- Check all fittings and tighten if necessary.
- Check the system for leaks.
- Place insulation shells (**6**) for the heating circuit distributor inside each other at the top and then press them together.
- Push insulation shells (**11**) from both sides onto the relevant heating circuit set and screw loosely in place using the plastic screw.

5 Electrical connection

- Make all electrical connections in accordance with the wiring diagram.
- Insert the electric leads into the cableway (Fig. 6, **Item 1**) on the rear insulation shell and route towards the rear.
- The connection leads must not touch any hot boiler parts.

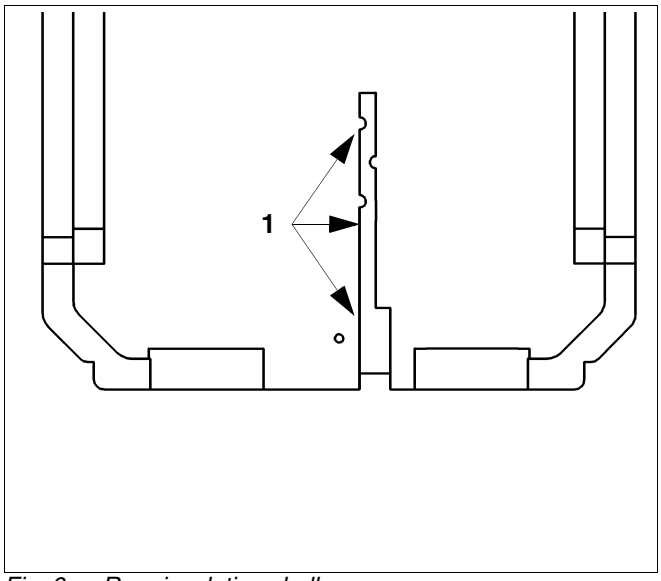

Fig. 6 Rear insulation shell

We reserve the right to make any changes due to technical modifications.

Your local heating contractor:

Buderus

BBT Thermotechnik GmbH, D-35573 Wetzlar
www.heiztechnik.buderus.de
info@heiztechnik.buderus.de