Installation instructions

Boiler plinth G215/G225

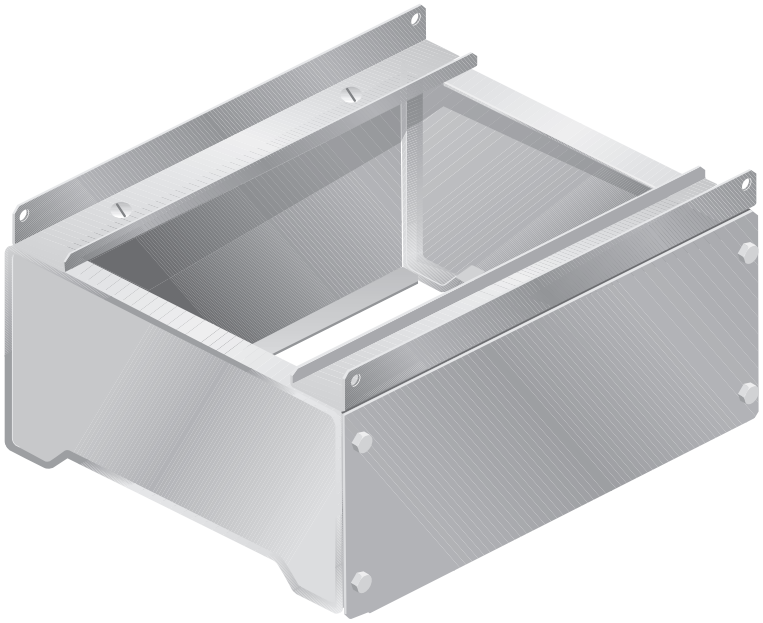

Buderus

Scope of supply

- Check that the packaging is in perfect condition upon receipt.
- Check that the delivery is complete.

The main components of the boiler plinth are:

– 2 boiler feet (Fig. 1, **Item 1**)

– 2 side panels (Fig. 1, **Item 2**)

– 2 angled rails (Fig. 1, **Item 3**)

– 8 screws (M6 × 16) (Fig. 1, **Item 4**)

– 4 countersunk bolts (M10 × 25) (Fig. 1, **Item 4**)

– 4 nuts (M10) (Fig. 1, **Item 4**)

– 4 bolts (M8 × 25) (Fig. 1, **Item 4**)

– 4 nuts (M8) (Fig. 1, **Item 4**)

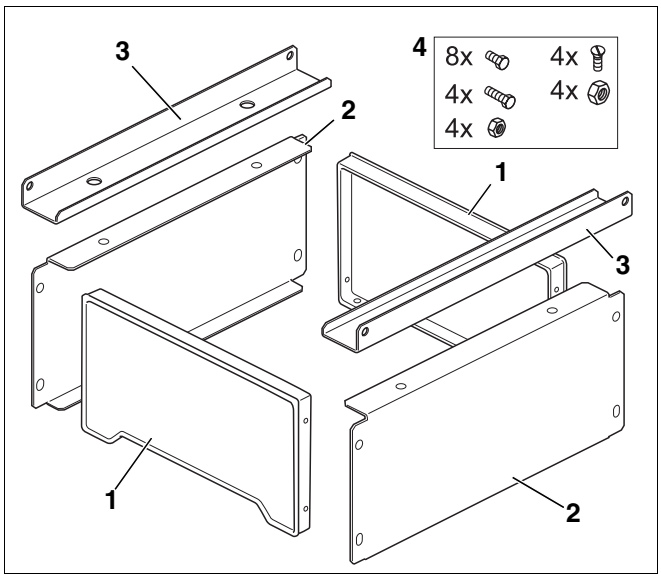

Fig. 1 Scope of supply

Item 1: *Boiler foot*

Item 2: *Side panel*

Item 3: *Angled rail*

Item 4: *Nuts and bolts*

Fitting the boiler plinth

USER NOTE

Assemble the boiler plinth in the boiler room.

- Take one of the two identical boiler feet (Fig. 2, **Item 1**) and screw it loosely to one of the two identical side panels (Fig. 2, **Item 2**) using screws (Fig. 2, **Item 3**).

USER NOTE

Make sure that the holes on the boiler feet (Fig. 2, **Item 7**) are facing inwards (Fig. 2).

- Take the second boiler foot and screw it loosely to the side panels, also with the holes on the boiler feet facing inwards.
- Align boiler feet and side panels with each other and then screw them tight.
- Screw both angled rails (Fig. 2, **Item 4**) to the side panels (Fig. 2, **Item 2**) using countersunk bolts (Fig. 2, **Item 5**) and nuts (Fig. 2, **Item 6**).

USER NOTE

Make sure that the holes on the angled rails (Fig. 2, **Item 4**) are facing outwards (Fig. 2).

- Screw in adjustable feet.

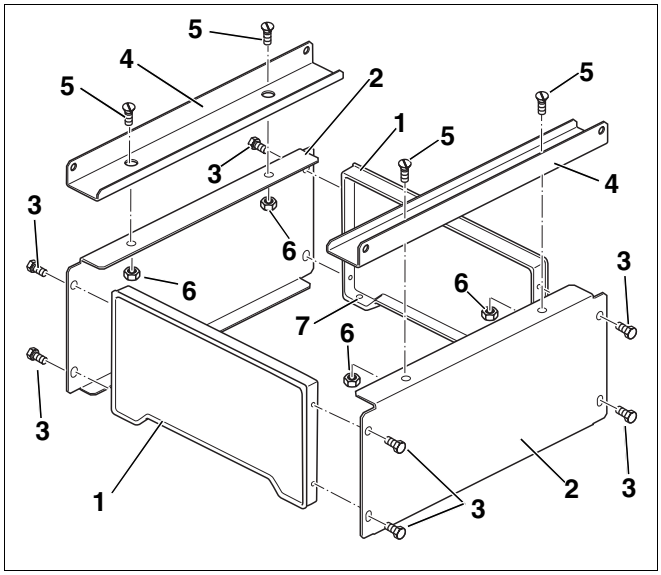

Fig. 2 Fitting the boiler plinth

Item 1: *Boiler foot*

Item 2: *Side panel*

Item 3: *Screw (M6 x 16)*

Item 4: *Angled rail*

Item 5: *Countersunk bolt (M10 x 25)*

Item 6: *Nut (M10)*

Item 7: *Hole for adjustable foot*

Mounting the boiler on the plinth

Only use a boiler plinth with G215 or G225 boilers. The boiler block is delivered lying flat on a pallet.

- Lay the boiler plinth on its side as well and align the angled rails with the boiler block in such a way that the holes in the angled rail (Fig. 3, **Item 2**) are aligned with the fixing holes on the boiler section feet (Fig. 3, **Item 1**).
- Bolt the plinth to the block using bolts M8 × 25 (Fig. 3, **Item 3**) and nuts M8 (Fig. 3, **Item 4**).
- Lift boiler block and plinth upright.

CAUTION!

RISK OF INJURY

through carrying heavy loads.

Use a crane or other suitable lifting device.

- Position and align the boiler block above the adjustable feet of the plinth as described in the boiler installation and maintenance instructions.

USER NOTE

If retrofitting the boiler plinth:

- Remove the boiler's four adjustable feet and screw them into the boiler plinth.
- Remove the casing parts from the boiler.
- If required, the weight of the boiler can be reduced by removing the burner door. Observe the installation and maintenance instructions of the boiler.
- Lay the boiler block on its side so that the boiler plinth can be fitted to it.

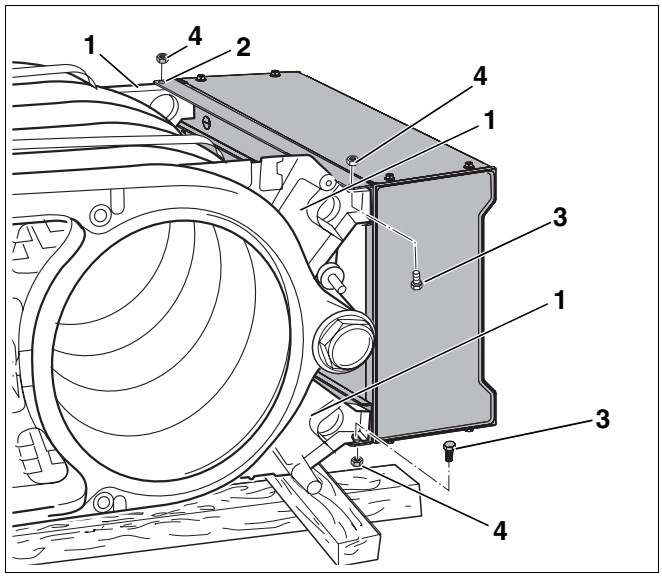

Fig. 3 Attaching the boiler plinth

Item 1: *Boiler section foot*

Item 2: *Hole in the angled rail*

Item 3: *Bolt (M8 x 25)*

Item 4: *Nuts (M8)*

Your local heating contractor:

Buderus

BBT Thermotechnik GmbH, D-35573 Wetzlar
www.heiztechnik.buderus.de
info@heiztechnik.buderus.de